EZVA SERIES

THRU-THE-WALL/BUILT-IN AIR CONDITIONERS
For New Construction and as Replacement for:
GE AZ Vertical, Friedrich Vert-I-Pak

PRODUCT INFORMATION

The EZVA heat pump is specifically designed for colder climates where low ambient temperature operation is required. The unit height is an industry standard 23 1/8" wide by 23 1/8" deep by 31" high. We offer our cooling chassis to operate as a heat pump only unit, or heat pump with backup electric heat. Its variable motor speed compressor provides variable refrigerant flow (VRF), rather than standard on/off operation. By operating at varying flow rates, VRF units work only at the needed capacity allowing for substantial energy savings under changing load conditions. The unit provides individually-zoned, comfort-controlled heating and cooling. Standard warranty is a one year parts and labor including five year compressor part only warranty, or a two year parts only including a five year compressor part only warranty.

FEATURES:

- Whisper Quiet Tangential Wheel
- Superior Energy Efficiency Ratios (EERs) and Coefficient of Performances (COPs)
- Commercial Duty Construction with Heavy Gauge Galvanized Steel
- Enhanced Vapor Injection (EVI) Compressor
- Fan Cycle Option Standard
- Dual-Stage electric heat element option
- Front desk control capable
- Hi Pressure Cutout Standard
- Self-diagnosis
- Random Auto Re-start
- Compressor time delay
- Room side freeze protection
- Washable air filter

ACCESSORIES:

- 18 gauge, powder-coat painted wall plenum
- Air Discharge Plenum Assembly Kit
- Wall Plenum/Drain Pan Kit
- Architectural Louver
- Access Panel (interior)
- Return Air Grille
- Wired or wireless remote thermostat
- Energy Management Thermostat
- I.R. motion sensor
- Door switch

OPTIONS:

- Available motorized fresh air damper

Component
EZ - Cooling Chassis

Model Type
VA - Islandaire Low Ambient Vertical Unit

Cooling Capacity
09 - 9,500 BTU
12 - 12,000 BTU
15 - 15,000 BTU
18 - 18,000 BTU
24 - 24,000 BTU

System Type
L - Heat Pump R32

Voltage/Line Cord
2 - 208/230v, 20 Amps
3 - 208/230v, 30 Amps
4 - 208/230v, Hard Wire
9 - 208/230v, 15 Amps
G - 208/230v, Junction Box

Return/Discharge Options
4 - Front Ret./Top Dis.

Identity Code
0 - Special
7 - Standard

Functional Options
A - None
B - Motorized Damper

EZ VA 12 L 2 3 I N 4 7 A A

Heating Options
3 - Dual Stage 3.4 kW Elec (2.5 kW / 0.9 kW)
4 - Dual Stage 5.0 kW Elec (3 kW / 2 kW)
8 - Dual Stage 7.2 kW Elec (5.0 kW / 2.2 kW)
9 - Dual Stage 10 kW Elec (7 kW / 3 kW)
A - None Cooling Only
B - 2.5 kW Elec. Heat (208v - 277v)
C - 3.4 kW Elec. Heat (208v - 277v)
E - 5.0 kW Elec. Heat (208v - 277v)

Hydronic Options
1 - None

Room Controls
E - Wireless Thermostat (type must be specified when placing order)
N - Wall Thermostat Interface, Std. Elect. Cntrls

Power Mgt. Options
A - None
C - Energy Mgt. N/O
D - Energy Mgt. N/C

Power Mgt. Codes*
A - A
P - C
T - D

*Codes are entered into model number.

Islandaire
The perfect fit.™

500 Middle Country Road, St. James, NY 11780 • 1-800-886-2759
e-mail: sales@islandaire.com • www.islandaire.com
Ph: 631-471-2900 • Fax: 631-471-2913

6140628 Rev. - (05/20/22)

EZVA SERIES

THRU-THE-WALL/BUILT-IN AIR CONDITIONERS

PRODUCT INFORMATION

Islandaire
The perfect fit.™

	EZ09	EZ12	EZ18	EZ24
Volts	208/230	208/230	208/230	208/230
Cooling Capacity (BTU/Hr)	9,200	12,600	16,800	24,000
Cooling Capacity Range (BTU/Hr)	6,300 - 11,800	6,500 - 14,900	10,500 - 19,500	13,900 - 25,600
EER	12.1	11.1	11.0	11.0
Heating Capacity (BTU/Hr)	10,200	12,000	15,200	19,000
Heating Capacity Range (BTU/Hr)	5,200 - 12,600	5,600 - 14,200	11,500 - 19,200	15,100 - 25,900
COP	3.6	3.3	3.3	3.3
HSPF	9.6	9.5	9.0	9.0
Amps, Cooling	3.65/3.30	5.46/4.93	7.33/6.63	10.48/9.48
Power (Watts), Cooling	760/760	1,135/1,135	1,525/1525	2,180/2,180
Amps, Heating	3.99/3.61	5.46/4.93	6.49/5.87	8.10/7.33
Power (Watts), Heating	830/830	1,200/1,200	1,350/1,350	1,685/1,685
Evap motor Nominal HP	1/25	1/25	1/25	1/25
Airflow (CFM), High Cool	375	375	600	800
Airflow (CFM), Low Cool	260	260	525	610
Weight	135	145	260	360
Low Ambient Heating Capacity @ 47ºF	10,200	12,000	18,000	24,000
Low Ambient COP @ 47ºF	3.6	3.1	2.94	2.83
Low Ambient Heating Capacity @ 10ºF	6,600	7,700	11,700	15,600
Low Ambient COP @ 10ºF	2.2	2.14	1.91	1.84
Low Ambient Heating Capacity @ 5ºF	6,100	6,900	10,600	14,200
Low Ambient COP @ 5ºF	1.98	1.91	1.72	1.66
Low Ambient Heating Capacity @ -5ºF	5,500	6,400	9,600	12,800
Low Ambient COP @ -5ºF	1.74	1.62	1.38	1.29

Heating Option	Voltage (1)	Wattage	BTU/h	Amps (2)
3	208	2,780	9,500	13.37
	230	3,400	11,600	14.78
	277	3,600	12,300	13.00
4	208	4,090	14,000	19.66
	230	5,000	17,100	21.74
	277	5,000	17,100	18.05
8	208	5,890	20,100	28.31
	230	7,200	24,600	31.30
	277	10,445	35,600	37.70
9	208	8,180	27,900	39.32
	230	10,000	34,100	43.48
	277	14,505	49,500	52.36
B	208	2,045	7,000	9.83
	230	2,500	8,500	10.87
	277	2,500	8,500	9.03
C	208	2,780	9,500	13.37
	230	3,400	11,600	14.78
	277	3,600	12,300	13.00
L	208	5,890	20,100	28.31
	230	7,200	24,600	31.30
	277	7,200	24,600	25.99
M	208	8,180	27,900	39.32
	230	10,000	34,100	43.48
	277	10,000	34,100	36.10

(1) Voltage is Single Phase, Alternating Current and R.M.S.
(2) Amp values are for heating element only.

Where applicable, cooling capacities are specified at conditions of 95 °F DB/75 °F WB (35 °C DB/24 °C WB) outdoor and 80 °F DB/67 °F WB (27 °C DB/19 °C WB) indoor and heating capacities are specified at conditions of 47 °F DB/43 °F WB (8 °C DB/6 °C WB) outdoor and 70 °F DB/60 °F WB (21 °C DB/16 °C WB) indoor in accordance with AHRI 310/380 and CSA C744 standards. Wattage, Amperage, EER, and COP listings include compressor, evaporator motor and condenser fan motor. The above ratings are a typical heat pump style unit.

Line Voltage	Maximum Amperage	Wall Socket Configuration	Receptacle Number	Electrical Heat Options
115	12		NEMA 5-15R	1.3
115	16		NEMA 5-20R	1.7
208/230	12		NEMA 6-15R	2.5
208/230	16		NEMA 6-20R	3.4
208/230	24		NEMA 6-30R	4.2 - 5.0
277	16		NEMA 7-20R	2.5 - 4.2
277	24		NEMA 7-30R	5.0

Islandaire has a policy of continuous improvement of its products and reserves the right to change the materials and specifications without notice.

500 Middle Country Road, St. James, NY 11780 • 1-800-886-2759
e-mail: sales@islandaire.com • www.islandaire.com
Ph: 631-471-2900 • Fax: 631-471-2913

EZVA SERIES

THRU-THE-WALL/BUILT-IN AIR CONDITIONERS

PRODUCT INFORMATION

Islandaire
The perfect fit.™

9k thru 15k Unit Dimensions:

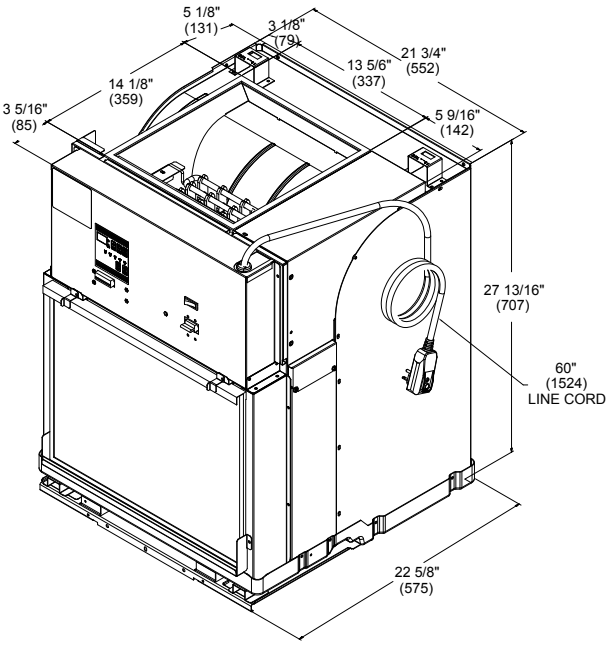

18k and 24k Unit Dimensions:

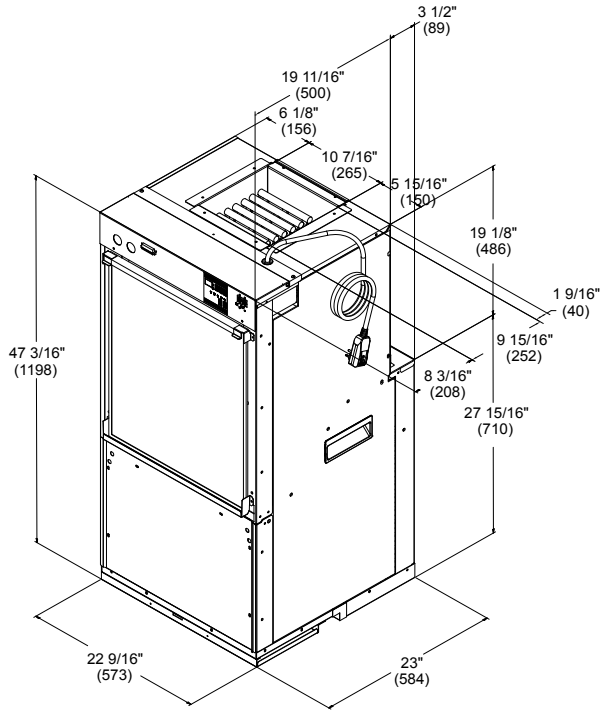

Discharge Plenum Dimensions:

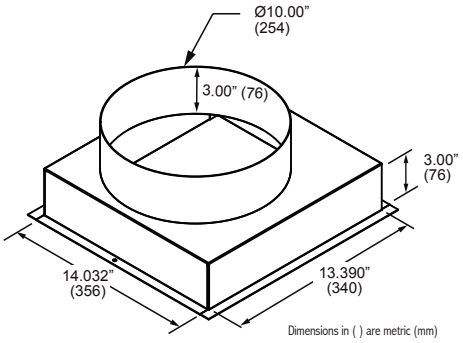

Dimensions in ( ) are metric (mm)

Wall Plenum Assembly Dimensions:

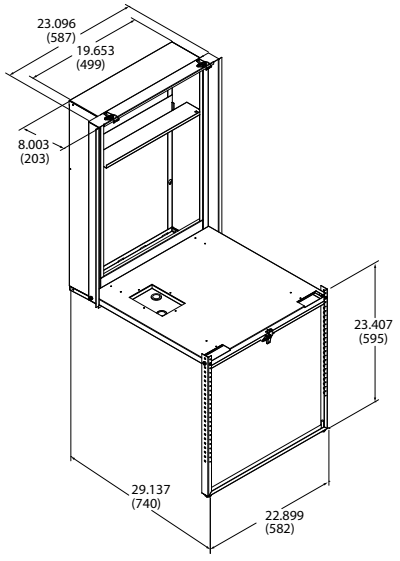

Intertek

500 Middle Country Road, St. James, NY 11780 • 1-800-886-2759
e-mail: sales@islandaire.com • www.islandaire.com
Ph: 631-471-2900 • Fax: 631-471-2913

EZVA SERIES

THRU-THE-WALL/BUILT-IN AIR CONDITIONERS

PRODUCT SPECIFICATIONS

Islandaire
The perfect fit.™

PLENUMS/ADAPTERS

PART NUMBER	DESCRIPTION	APPROX WT.	DIMENSIONS		
			DEPTH	WIDTH	HEIGHT
4091635	EZVA Wall Plenum Assembly*	54 lbs.	6.000″	19.875″	32.000″
4091651	EZVA Wall Plenum Assembly*	56 lbs.	8.000″	19.875″	32.000″
4091652	EZVA Wall Plenum Assembly*	58 lbs.	10.000″	19.875″	32.000″
4091653	EZVA Wall Plenum Assembly*	60 lbs.	12.000″	19.875″	32.000″
4091654	EZVA Wall Plenum Assembly*	63 lbs.	15.000″	19.875″	32.000″
* To use new style EZVA Wall Plenum Assembly with an existing (old style) wall plenum, order part number 4091649, which includes plenum adapter and base pan portions only.					
Friedrich replacement units requires below wall plenum adapter:					
2401062-06	EZVA Wall Plenum, Assembly, Adapter for Friedrich	23 lbs.	7.400″	25.404″	33.202″

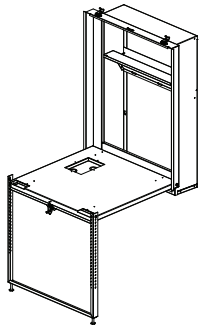

LOUVERS

PART NUMBER	DESCRIPTION	APPROX WT.	DIMENSIONS		
			DEPTH	WIDTH	HEIGHT
6070431	EZVA Architectural Louver, External, Std.	10 lbs.	1.063″	19.875″	31.750″
6070462	EZVA Wall Return Air Grille	10 lbs.	0.3125″	20.000″	20.000″
6070548	EZVA Stamped Louver	10 lbs.	1.063″	19.875″	31.750″

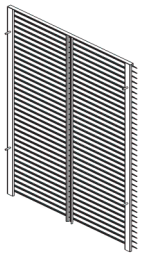

ACCESS PANELS

PART NUMBER	DESCRIPTION	APPROX WT.	DIMENSIONS		
			DEPTH	WIDTH	HEIGHT
4084085-00	EZVA Access Panel w/ Return Air Grille	25 lbs.	1.923″	30.125″	50.125″
4084962-00	EZVA Access Panel, Solid	25 lbs.	1.923″	30.125″	50.125″
4084834-00	EZVA Access Panel, Baffled w/Return Air Grille	36 lbs.	2.072″	30.125″	50.125″

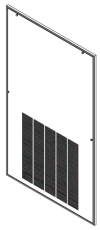

THERMOSTATS

PART NUMBER	DESCRIPTION	APPROX WT.	FEATURES		
			CONNECTION	STAGE	DISPLAY
6041206	Islandaire Non-Programmable, Two Fan Speed	1.0 lbs.	Wireless	Single	Horizontal
6041210	Islandaire Programmable ,Two Fan Speed	1.0 lbs.	Wireless	Single	Horizontal
6041228	Islandaire Programmable (7 Day/5-1-1 Day/ Non-Programmable), Two Fan Speed	1.0 lbs.	Wired	Single	Horizontal
6041373	Islandaire Wireless, WiFi Programmable	1.0 lbs.	Wireless	Single	Horizontal

FILTERS

PART NUMBER	DESCRIPTION	APPROX WT.	DIMENSIONS		
			DEPTH	WIDTH	HEIGHT
6080125	Electrostatic Filter (original equipment)	2 lbs.	1.000″	20.000″	16.000″
6080118	MERV8 Filter	2 lbs.	1.000″	20.000″	16.000″
6080123	MERV11 Filter	2 lbs.	1.000″	20.000″	16.000″
6080124	MERV13 Filter	2 lbs.	1.000″	20.000″	16.000″

OTHER

PART NUMBER	DESCRIPTION	APPROX WT.	DIMENSIONS		
			DEPTH	WIDTH	HEIGHT
4091640	Air Discharge Plenum Kit (used with 7AA units)	3 lbs.	13.462″	14.000″	6.000″

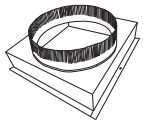

Islandaire has a policy of continuous improvement of its products and reserves the right to change the materials and specifications without notice.

500 Middle Country Road, St. James, NY 11780 • 1-800-886-2759
e-mail: sales@islandaire.com • www.islandaire.com
Ph: 631-471-2900 • Fax: 631-471-2913

Ask your salesman about our DR. VTAC option!*

DR. PTAC

THE CURE FOR UNCONDITIONED MAKE-UP AIR™

*100% conditioned fresh air

Contact Sales for information about our custom-sized PTAC/PTHP and Water Source Heat Pump Units

CELEBRATING OUR 30th ANNIVERSARY 1992 - 2022

Islandaire

The perfect fit.™

500 Middle Country Road, St. James, NY 11780 • 1-800-886-2759

e-mail: sales@islandaire.com • www.islandaire.com

Ph: 631-471-2900 • Fax: 631-471-2913

Locally Represented By: