VERITUS®

AIR SOURCE HEAT PUMP WATER HEATER

AIR SOURCE HEAT PUMP WATER HEATER

HIGH COEFFICIENT OF PERFORMANCE (COP) UP TO 4.61

OPERATES EFFICIENTLY IN TEMPERATURES AS LOW AS 23°F

MODULAR DESIGN CONCEPT

LOW GLOBAL WARMING POTENTIAL (GWP) REFRIGERANT (R513A)

PACKAGE SOLUTIONS AVAILABLE

FEATURES Lochinvar SMART TOUCH™



DESIGNED ★ ENGINEERED ★ ASSEMBLED USA

Lochinvar®

A DIFFERENCE MAKER

By absorbing the maximum amount of energy from the ambient air and efficiently passing that energy to the water, Veritus provides hot water using the least amount of electricity possible, boasting a high coefficient of performance (COP) throughout the operating range. A high COP coupled with a low global warming potential (GWP) refrigerant (R513A) makes Veritus the best choice for a wide variety of commercial water heating applications. Its superior performance effectively reduces carbon output and enhances greenhouse gas reduction efforts.

Lochinvar has a history of new product development in high efficiency water heating equipment. We have continuously invested in cutting edge technology and product development facilities. To support the Veritus heat pump water heater development, Lochinvar installed an environmental chamber to verify heat pump performance in a variety of external temperatures and humidity levels. This investment allows us to confirm our full operational range and provide accurate and credible product data.





Environmental chamber can be adjusted from -5°F to 140°F

AHP PERFORMANCE

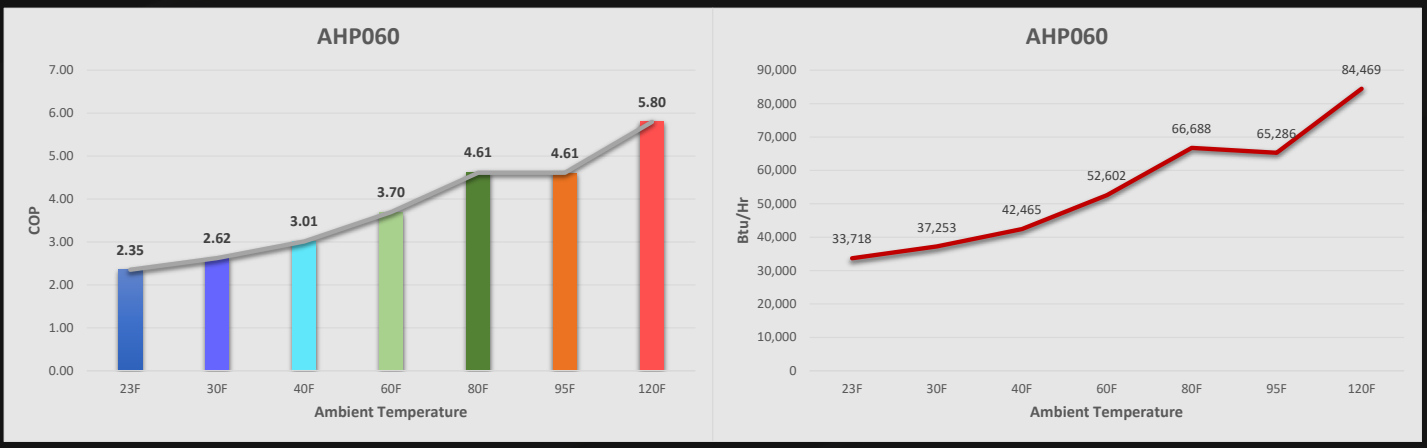

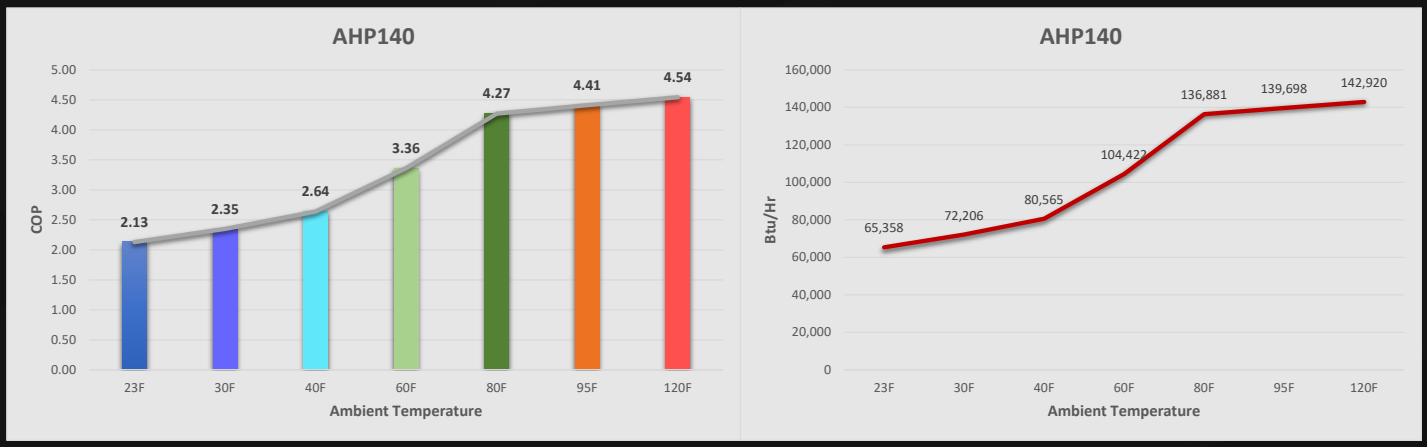

Performance varies per model, please reference individual unit performance tables/charts when sizing your system.
Performance based on test points from the DOE and AHRI 1300 Test Standards

VERITUS FEATURES

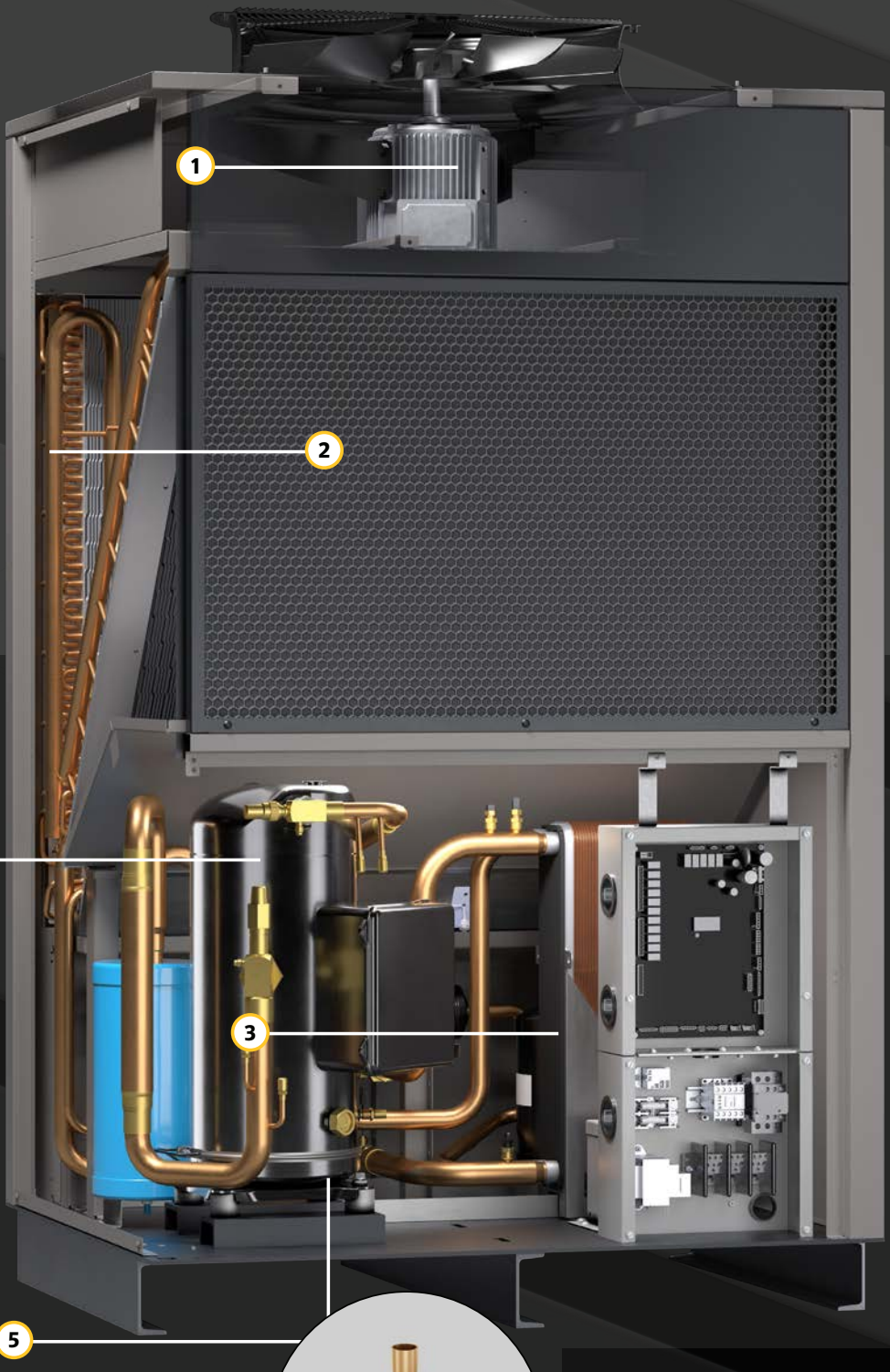

1 EVAPORATOR FAN
ECM and variable speed.
Fan changes speed as required to control outlet water temperature.

2 EVAPORATOR
COPPER TUBING WITH ALUMINUM FINS
Ambient air is pulled over the coil and heat is absorbed into the refrigeration system.

3 CONDENSER
STAINLESS STEEL, DOUBLE-WALL
Heat from the refrigeration cycle is transferred into the domestic hot water.

4 COMPRESSOR
RELIABLE SCROLL TECHNOLOGY
Pushes refrigerant to the center of one stationary scroll and one orbiting scroll, compressing it.

5 REVERSING VALVE
QUICK DEFROST
Defrost is required when the heat pump is operating in lower ambient conditions and high humidity. The quicker the defrost, the more time the unit can be producing hot water.



PUMP
ECM AND VARIABLE SPEED
The speed of the pump changes to control the delivery of water to the storage tanks at the required temperature.



EASE OF INSTALLATION

Another feature that Lochinvar keeps top-of-mind is product footprint and ease of installation. The Veritus heat pump water heater has a modular design making size selection and transport easy. Shipped separately, single Veritus units can be installed for smaller hot water output or manifolded together for larger application demands. When installing, the models can be moved via freight elevators due to their individual size and weight.

Providing further flexibility, the Veritus heat pump water heaters can be located outside the facility, such as on a rooftop, while keeping ancillary equipment like storage tanks located inside the mechanical room or other indoor location.



AHP 280 with three Thermal-Stor HP750G tanks. Control panel mounted on the wall.

Lochinvar SMART TOUCH™

The control panel featuring the SMART TOUCH™ control can be removed from the unit and installed in an entirely different location, allowing it to be easily adjusted and monitored.

SMART TOUCH FEATURES

BACKUP ENABLE – Control a back-up source with an Enable Contact or a 0-10V signal. Pipe a back-up source in parallel with the heat pump or in series with storage tanks.

ALARM CONTACT – Sends notifications to off-site locations when faults occur or connect to a Building Management System.

CASCADE WITH FLEX ADDRESSING – No more programming of control to set up cascade. Heat pump controls begin communication with control panel during initial startup.

FREEZE PROTECTION – The heat pump can enable field installed heat tape, along with energizing the pump and compressor during low ambient and water temperatures.









AHP140 with control panel mounted at unit.

Thermal-Stor ™



Example of a package solution. Designed and built at Lochinvar.

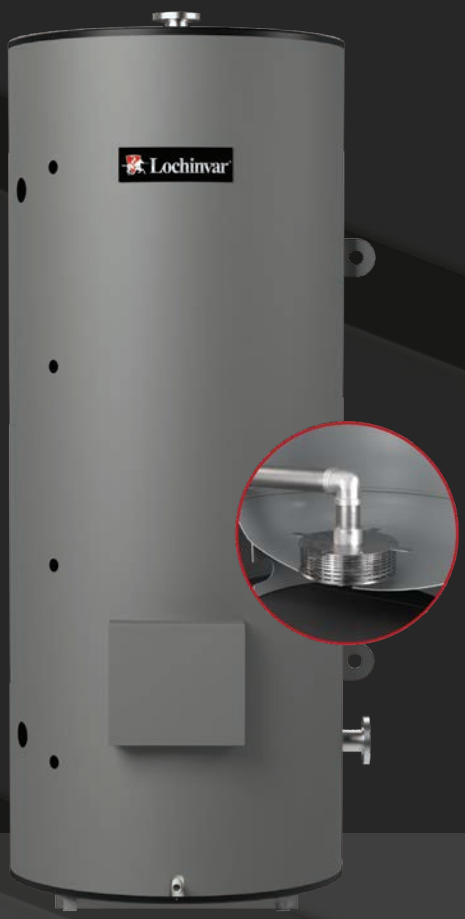

Thermal-Stor tank and baffle.

The storage of thermal energy is an important element in the optimization of heat pump water heater performance. That's why Lochinvar's engineering team has designed the Thermal-Stor™ heat pump storage tank. This storage tank features a patent pending baffle that keeps water stratified, preventing the mixing of hot and cold water inside the tank, ensuring continual hot water output. The Veritus heat pump water heater is well suited for single pass piping and makes use of ECM circulators and smart valves to regulate water flow through the system. This pairing of the Veritus heat pump water heater and Thermal-Stor (indoor and outdoor options) heat pump storage tank provides optimal performance and satisfied end-users.

SIZING QUESTIONS ANSWERED

Because heat pump water heaters and thermal storage tanks work together as an integrated system, it can be challenging to accurately size equipment for your application. Lochinvar offers assistance with a proprietary sizing program to help ease those challenges. Contact your local representative for access to this value-added service or submit a sizing request at Lochinvar.com.

MULTI FAMILY SIZING PROFILE

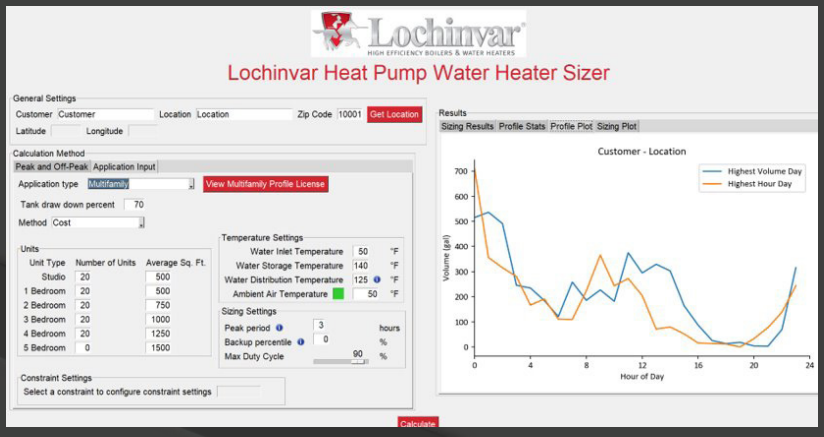



Outdoor Thermal-Stor

VERITUS™ HEAT PUMP WATER HEATER PIPING DIAGRAMS

SINGLE PASS RETURN TO PRIMARY: TWO HEAT PUMPS, TWO TANKS

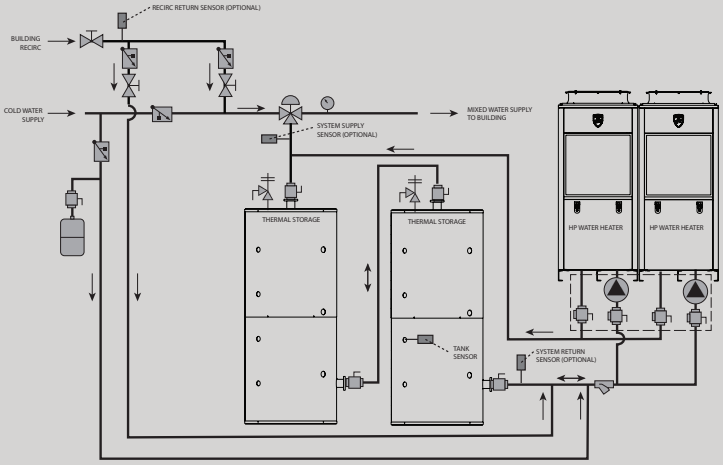

Veritus is capable of return-to-primary which allows the domestic recirculation line to be piped back to the heat pump. This eliminates the need for a swing/maintenance tank, saving installation cost, time and space.

SINGLE PASS RETURN TO PRIMARY: TWO HEAT PUMPS, TWO TANKS, ELECTRONIC BACKUP

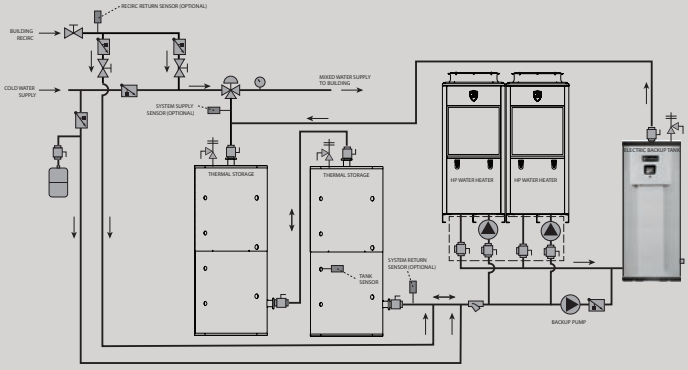

Utilizing a gas back up unit could create a hybrid system to be used in extreme cold weather situations. Alternately, gas water heaters could be used during times of peak electrical rates.

SINGLE PASS RETURN TO PRIMARY: TWO HEAT PUMPS, ONE TANK, SWING TANK

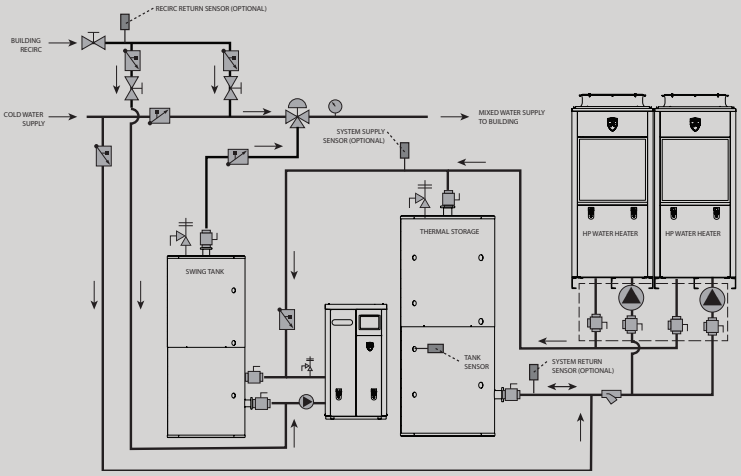

Utilizing an electric water heater could provide a back up solution with no carbon emissions. Using existing thermal storage coupled with a smaller backup water heater saves utility and installation costs.

MULTI PASS RETURN TO PRIMARY: ONE HEAT PUMPS, ONE TANK

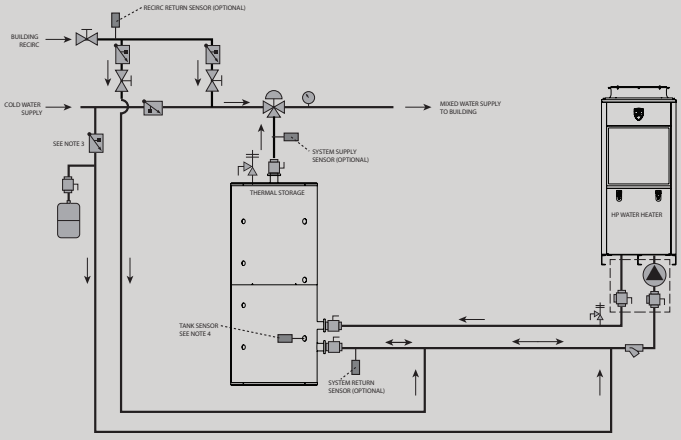

Veritus is capable of multi-pass return to primary without additional set-up or configuration. Pulling from the bottom of the tank, Veritus will control the flow to ensure the outlet temperature matches the set-point.

VERITUS™ HEAT PUMP WATER HEATER DIMENSIONS AND CONFIGURATIONS

AHP200

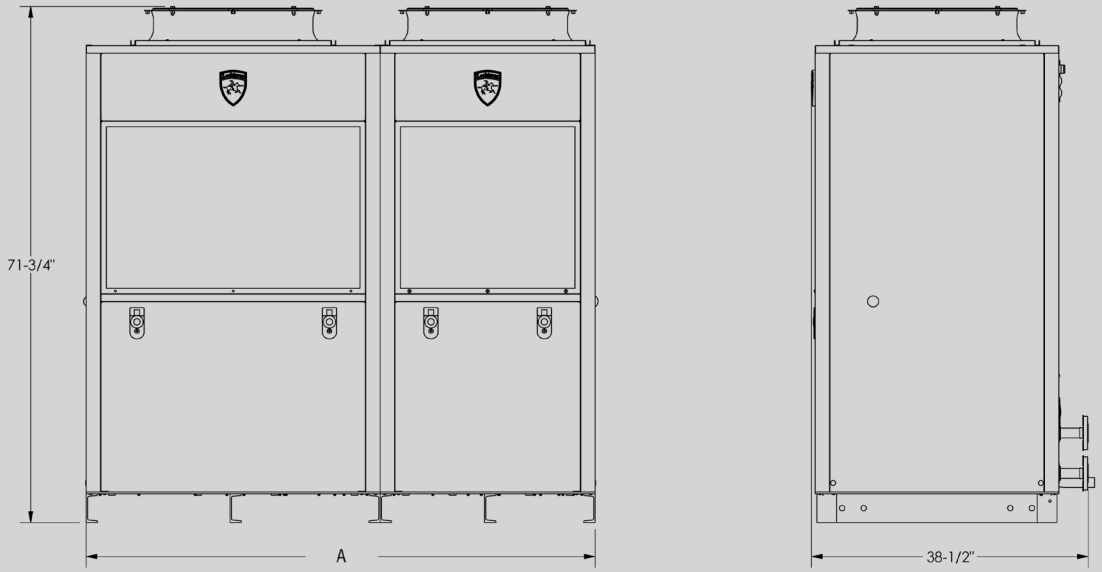

1-60 + 1-140 MODULE, 1-CONTROL PANEL & MANIFOLD PANEL PACKAGED & SHIPPED SEPARATELY.

AHP280

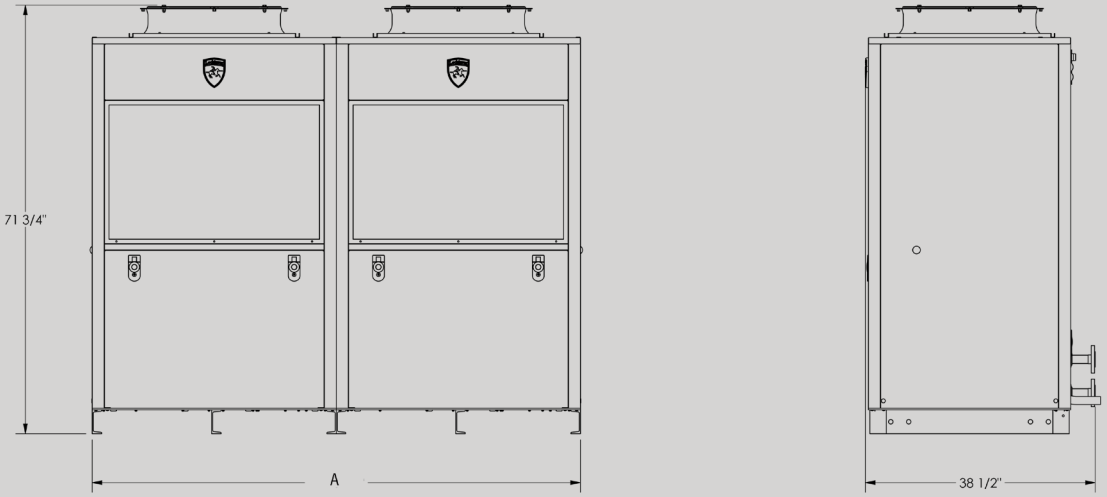

2-140 MODULES, 1-CONTROL PANEL & MANIFOLD PANEL PACKAGED & SHIPPED SEPARATELY.

AHP350

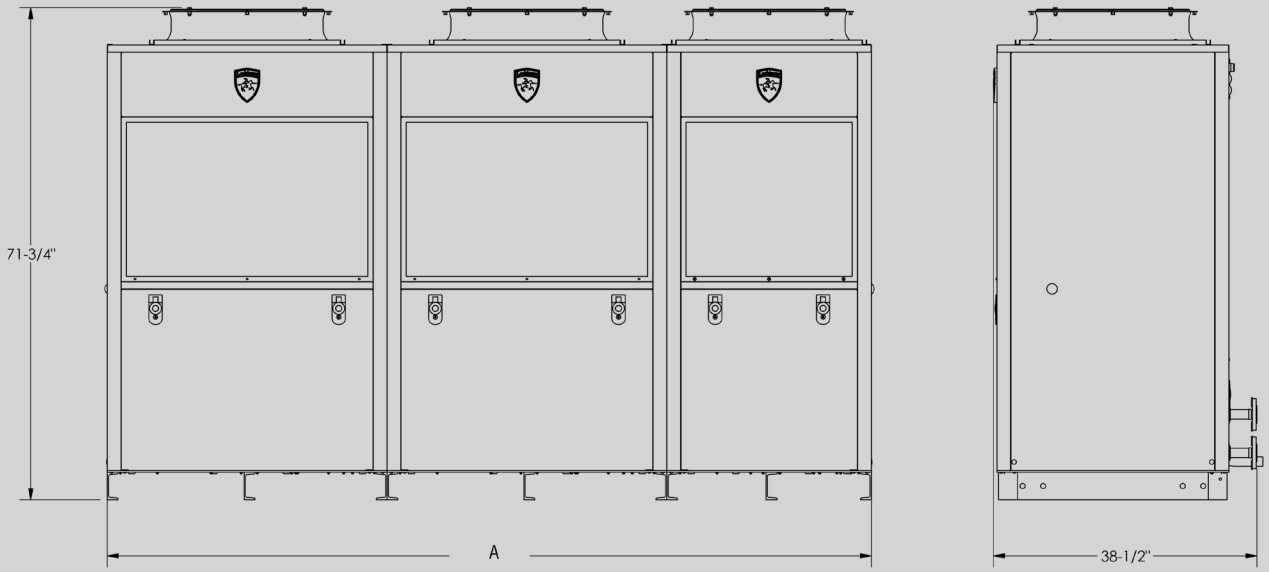

2-140 + 1-60 MODULE, 1-CONTROL PANEL & MANIFOLD PANEL PACKAGED & SHIPPED SEPARATELY.

VERITUS™ HEAT PUMP WATER HEATER DIMENSIONS AND SPECIFICATIONS

AHP060, AHP140

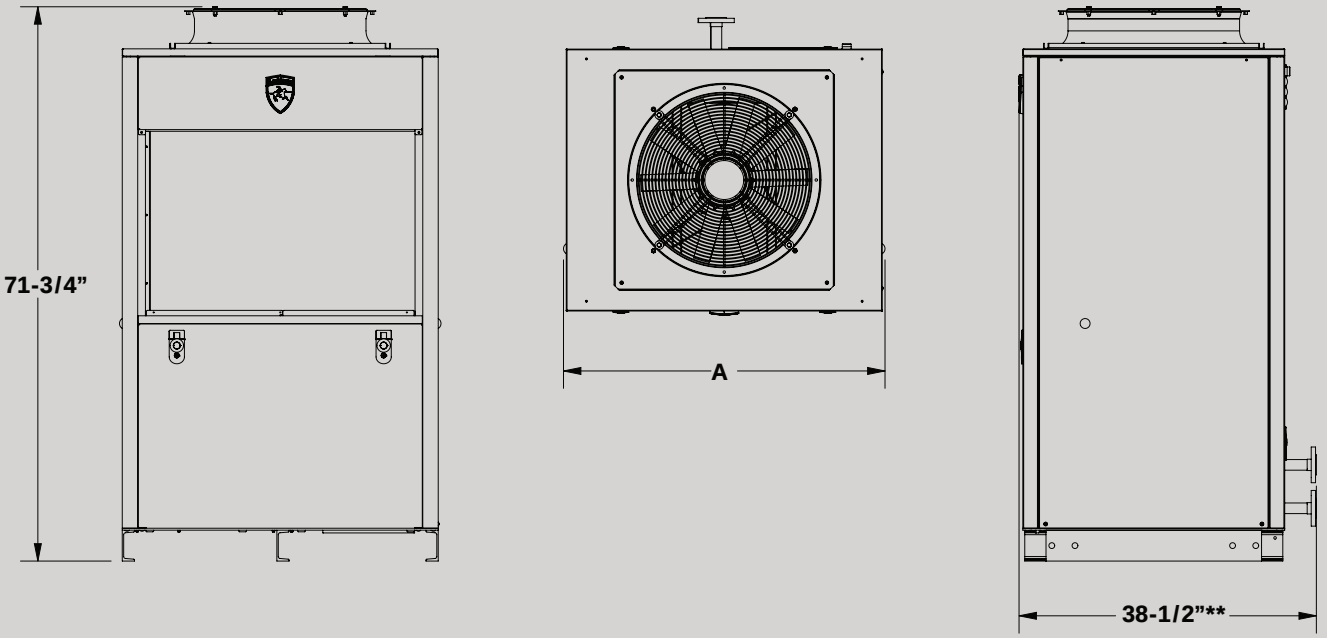

AIR SOURCE HEAT PUMP	DIMENSIONS AND SPECIFICATIONS				
Model Number	**COP***	**Maximum Output BTU/Hr***	**A**	**Shipping Weight**	**Total # Modules**
AHP060	4.61	66,688	30-5/8"	1,155	1
AHP140	4.27	136,881	41-5/8"	1,370	1
AHP200***	4.38	203,069	72-1/4"	2,505	2 (60 + 140)***
AHP280***	4.27	272,762	83-1/4"	2,721	2 (2 x 140)***
AHP350***	4.34	339,450	113-7/8"	3,854	3 (2x 140 + 60)***

** DOE test standard, 80°F ambient with 63% humidity, inlet water temperature at 70°F, outlet water temperature at 120° F.*
***The field installed piping manifold will increase the depth of the units to 63”*
**** Packaged Separately (Models AHP200-350)*

STANDARD FEATURES

High Efficiency COP
ZERO On-site Emissions
Modular Design
480 Volt 3 Phase
Maximum Set-point of 160F°
Single or Multi Pass
› **Scroll Compressor (Copeland)**
Core Sense Module
ECM Variable Speed Pump
Electronic Expansion Valve
Reversing Valve
System Control Panel *(Remote Mountable - Packaged Separately)*
Manifold Piping Assembly***(Packaged Separately for Models AHP200-350 Only)*
1 Year Limited Warranty *(See Warranty for Details)*

SMART TOUCH FEATURES

Smart Touch Operating Control
Cascade Sequencer for up to 64 Heat Pump Modules
Building Automation Integration with 0-10 VDC Input
Variable Speed Pump Control
Fault Logging
Low Voltage Terminal Strip
Alarm Contact
Backup Enable
Booster Fan Contact

OPTIONAL EQUIPMENT

Single Point Electrical (Bus Panel) - *For Models AHP 200-350 Only*
Step Up Transformer (208 Volt 3 Phase to 480 Volt 3 Phase)
BMS Gateway to Modbus RS485/TCP and BACnet IP/ MSTP
Seismic brackets (1 needed per module)
Coastal Coating (Field applied evaporator only)
5 Year Optional Extended Compressor Warranty *(See Warranty for Details)*

Lochinvar®
Lochinvar, LLC
300 Maddox Simpson Parkway
Lebanon, Tennessee 37090
P: 615.889.8900 / F: 615.547.1000
Lochinvar.com