Slow Moving Case Hardware

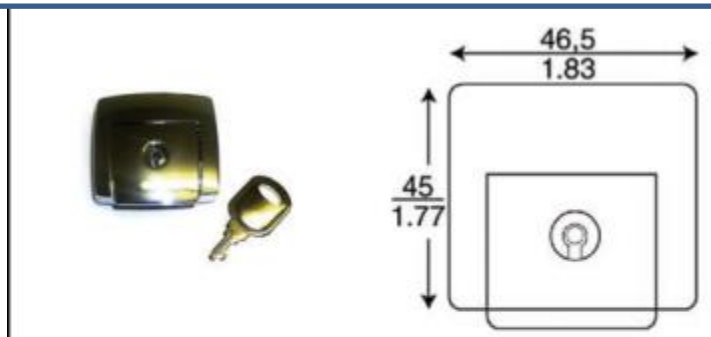

Diecast Draw Latch.

Special order outside USA

Material: Steel
Weight: 0.055Kg/0.12Lb

*1450 Automatic Drawbolt qty 15 @ $12.83 + ea



1462YZ Slip Hinge Pin RH Side qty 380 @ $1.21 + ea
1462YZ Slip Hinge Pin LH Side qty 338 @ $1.12 + ea



2460 Chest Handle
qty 15 @ $1.90 + ea

Take 75% off



Drawer Slide. Trigger Release Disconnect.
Sold in Pairs.
Load capacity 35Kg/77Lbs per pair.

*R2010Z DRAWER SLIDE, 254MM (PAIR)
qty 13 $6.60 per pair
*R2018Z DRAWER SLIDE, 457MM (PAIR)
Qty 3 & $11.72 per pair

All prices exclude 10% GST

*Discontinued item –

1st in Basis - Specials Valid while stocks last as at 1st November 2017

Slow Moving Case Hardware



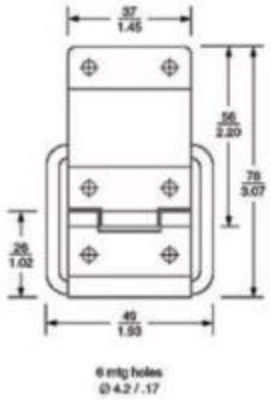

Large Stop Hinge. 6-Hole. Holds Lid Open @ 95°.

Special order outside USA

Material: Steel
Weight: .045Kg/0.099Lb

Similar to P1990

***2528 Large Stop Hinge nickel qty 889 @ $1.41 + ea**

***2528C Large Stop Hinge Chrome qty 994 @ $1.47 + ea**

Take 75% off



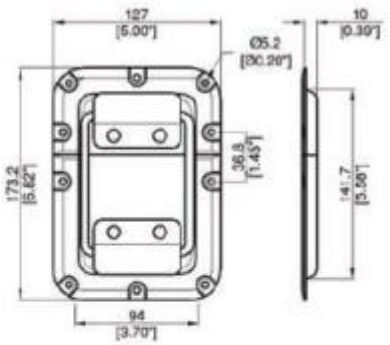

***D8925Z Lidstay 10mm Dish qty 92 @ $7.99 + ea**

Lidstay with 10mm deep **Evolution** dish.
Available from july 2006

Weight: 0.390kg

D8925Z Zinc

All prices exclude 10% GST

*Discontinued item - 1st in Basis - Specials Valid while stocks last as at 1st November 2017

Slow Moving Case Hardware



C0025BL Welded Case Corner Stackable
Blue qty 1986 @ $1.54 + ea
C0025OR Welded Case Corner Stackable
Orange 1990 @ $1.54 + ea

Take 75% off





Large Heavy Duty Ball Corner

Internal Radius: 3mm / 1/8"



Extra Heavy Duty version also available (2.5mm / 3/32" thick)

Material: 2.0mm / 14 gauge Steel

C1375S Large Heavy Duty Corner Stainless qty 430 @ $5.56 + ea

All prices exclude 10% GST

*Discontinued item - 1st in Basis - Specials Valid while stocks last as at 1st November 2017

Slow Moving Case Hardware



D4027K Dish - 1 Speakon
qty 20 @ $9.36 + ea

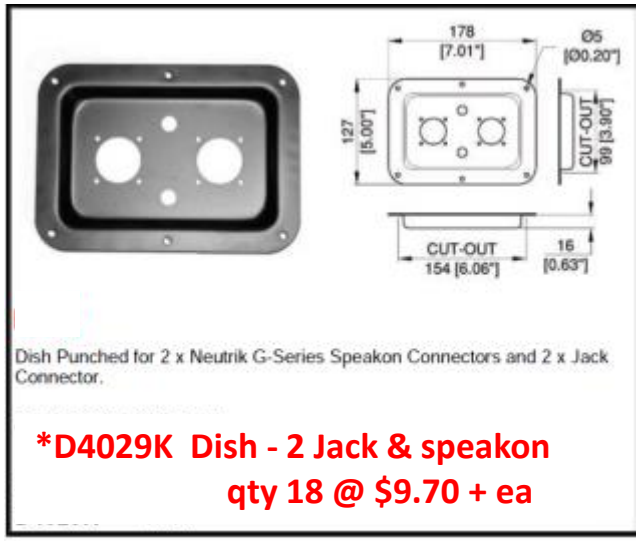

***D4029K Dish - 2 Jack & speakon**
qty 18 @ $9.70 + ea



D9803 Angled Dish 2 Jacks
qty 9 @ $7.78 + ea

Take 75% off



qty 10 @ $9.56 + ea



5710BK ROPING EYE NO MOVING PARTS
qty 21 @ $4.07 + ea

All prices exclude 10% GST

*Discontinued item

- 1st in Basis - Specials Valid while stocks last as at 1st November 2017

Slow Moving Case Hardware



L0355K Combination Lock (pair)
qty 20 @ $47.56 + ea



L925/527Z Large Latch Offset 27mm
16mm Dish qty 47 @ $16.68 + ea

Take 75% off

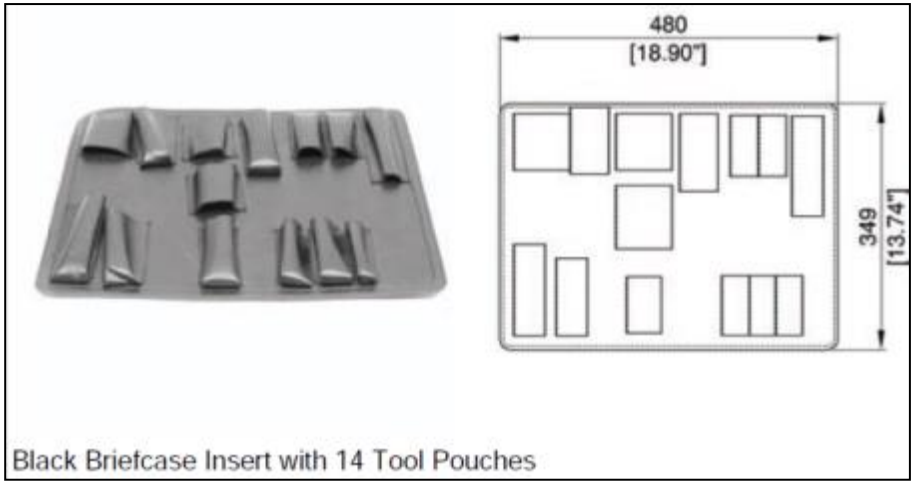

M1820 Tool Insert 14 PCS Black
qty 15 @ $24.82 + ea

*Discontinued item - 1st in Basis - Specials Valid while stocks last as at 1st November 2017

Slow Moving Case Hardware

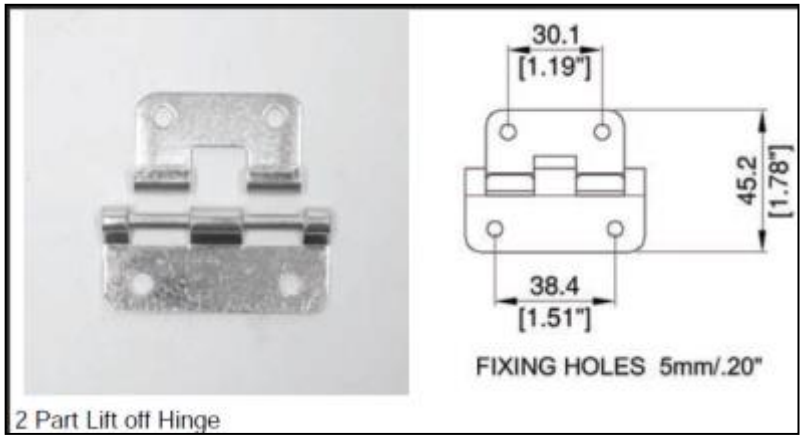

***P0627Z Hinge Lift off qty 40 @ $1.32 + ea**

P1320Z
1.83m L



P1320Z Piano Hinge 27mm Steel qty 5 @ $16.28 + ea

Take 75% off



P81507Z -PIANO HINGE, DOUBLE, 101MM (1.8M LENGTH) Qty 19 @ $58.43 ea



Universal 3-Way Castor Plate for 100mm / 4" Blue Wheel Castors
W9980 Castor Plate @ $7.10



80mm / 3.15" Swivel Castor.
Rubber Black Wheel with Sleeve Bearing.
Carrying Weight per Wheel: 60Kg / 132.28Lb
W0981 Fixed Castor
Qty 93 @ $6.00 + GST ea

All prices exclude 10% GST

*Discontinued item –

1st in Basis - Specials Valid while stocks last as at 1st November 2017

Slow Moving Case Hardware





*M842205	PLYWOOD, 5MM, RED ABS LAMINATED	7 @ $93.00
*M842406	PLYWOOD, 7MM, DARK GREY ABS LAMINATED	8 @ $ 94.95
M842506	PLYWOOD, 7MM, OLIVE ABS LAMINATED	12 @ $ 94.65
M842806	PLYWOOD, 7MM, LIGHT GREY ABS LAMINATED	31 @ $94.95
M842906 BIR	BIRCH PLYWOOD, 7MM, PURPLE ABS LAMINATED	12 @ $94.95
M843206	PLYWOOD, 7MM, WINE ABS LAMINATED	10 @ $94.95
M843211	PLYWOOD, 10MM, WINE ABS LAMINATED	10 @ $ 98.09
M8435	ABS SHEET, ORANGE	3 @ $ 30.00
M8441-6	STUCCO ALUMINIUM, .6MM	68 @ $ 56.13
M865407	FLIGHT PANEL, 7MM, SILVER	23 @ $ 174.96

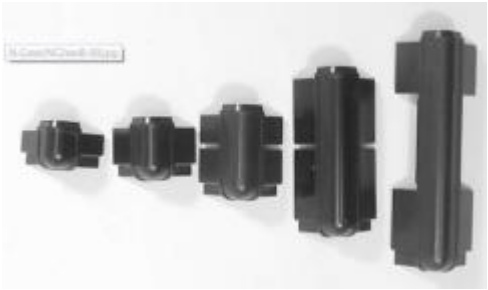

N-Case 2

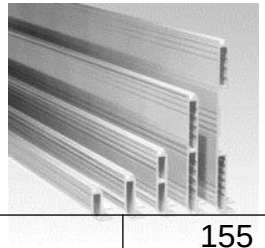

Take 45% off

NC2030BK	CORNER, PLASTIC, SUITS NE3030BAS	155	@ $ 1.16
NC2060BK	CORNER, PLASTIC, SUITS NE3060BAS	257	@ $ 1.35
NC2114LK	CORNER, PLASTIC, SUITS NE3114LAS	1,007	@ $ 1.64
NE3023BAS	BASE MAKER, 23MM, SUITS NC2023BK (PER METRE)	214	@ $ 6.39
NE3030BAS	BASE MAKER, 30MM, SUITS NC030BK (PER METRE)	50	@ $ 7.70
NE3060BAS	BASE MAKER, 60MM, SUITS NC2060BK (PER METRE)	78	@ $15.15
NE3114LAS	LID MAKER, 114MM, SUITS NC2114LK (PER METRE)	114	@ $21.12

All prices exclude 10% GST

*Discontinued item - 1st in Basis - Specials Valid while stocks last as at 1st November 2017