POWER CONDENSER ASSEMBLIES

TUBE AND FIN CONDENSERS

© 2026 Omega Heavy Duty

Condensers

POWER CONDENSER ASSEMBLIES

891024

TUBE AND FIN



The 891024 is a roof-mounted condenser featuring a 12GA aluminum shell and an 11" power fan. It is enclosed with a molded ABS plastic cover that provides durability and a clean appearance. An innovative 2-row angled copper/aluminum coil allows this unit to maximize heat-rejection.

891024-12V.....12VDC

SPECIFICATIONS

Size/Dimension.....36.3"L x 25.7" W x 6.3" H
BTU/Capacity.....26,000 BTU/hr
Weight .....35 lbs
Condenser Coil.....Copper Tubing Aluminum Fin
Airflow.....930 CFM
Current Draw .....8.6 amps @ 12VDC
Fan.....11" Condenser Fan

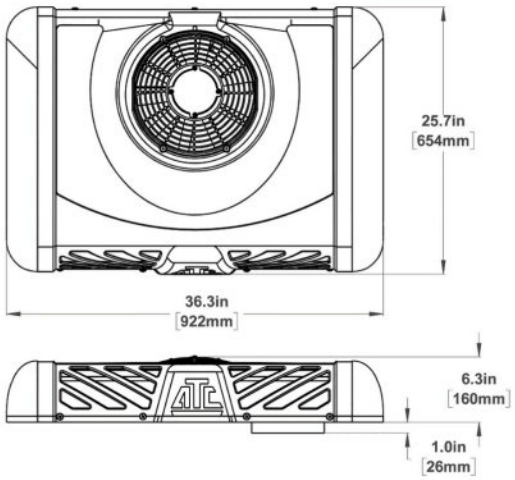

IMACA CONDITIONS

Capacity shown at IMACA conditions: 100°F (38°C) Ambient-Condenser/ 90°F (32°C) DB & 75°F (24°C) WB / 50% RH and condensing temperature of 135°F (57°C)

SERVICE PARTS	PART NO.
Condenser Coil, Blue Fin	M970271
Condenser Fan - 11", 12VDC Puller	25-14852-S
Receiver Drier	7502
Refrigerant Sight Glass	4150

OPTIONS

- Engine Driven Compressor

Having trouble finding the right part for your application? We can help!

If you don't find what you are looking for, reach out and our team will custom build exactly the system you need. Contact Omega HD at sales@omegahd.com.

© 2026 Omega Heavy Duty

Condensers

891008

TUBE AND FIN

The 891008 condenser features a black textured, powder-coated 16GA satin coat steel housing and dual 10" power fans. Its robust design allows the unit to also be roof or wall mounted.



891008-12V.....12VDC

891008-24V.....24VDC

SPECIFICATIONS

Size/Dimension.....27.7"L x 14.6" W x 7.3" H
BTU/Capacity.....27,500 BTU/hr
Weight .....28 lbs
Condenser Coil.....Copper Tubing Aluminum Fin
Airflow.....1400 CFM
Current Draw .....14 amps @ 12VDC
8 amps @ 24VDC
Fan.....10" Condenser Fans

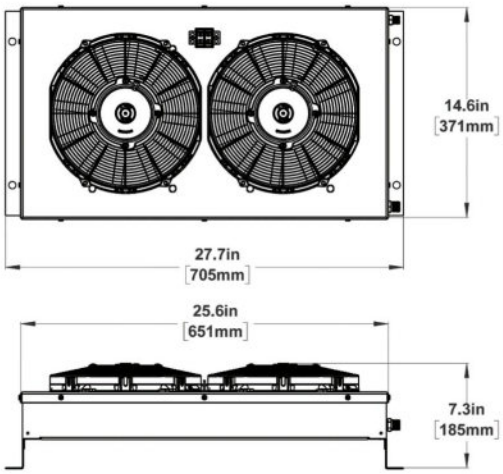

IMACA CONDITIONS

Capacity shown at IMACA conditions: 100°F (38°C)
Ambient-Condenser/ 90°F (32°C) DB & 75°F (24°C)
WB / 50% RH and condensing temperature of 135°F (57°C)

SERVICE PARTS	PART NO.
Condenser Coil, Blue Fin	875002
Condenser Fan - 10", 12VDC Puller	3560
Condenser Fan - 10", 24VDC Puller	3561

OPTIONS

- Engine Driven Compressor

Having trouble finding the right part for your application? We can help!

If you don't find what you are looking for, reach out and our team will custom build exactly the system you need. Contact Omega HD at sales@omegahd.com.

© 2026 Omega Heavy Duty

Condensers

POWER CONDENSER ASSEMBLIES

K TCK COND SPLIT

TUBE AND FIN

The K TCK COND SPLIT is designed with a copper/aluminum coil, a diamond plate aluminum shroud, one 11" power fan and drier. This unit looks great on the back of a semi truck but can be installed in any application.



K TCK COND SPLIT.....12VDC

SPECIFICATIONS

Size/Dimension.....21.8" L x 20" W x 8.7 H
BTU/Capacity.....29,000 BTU/hr
Weight.....30 lbs
Condenser Coil.....Copper Tubing Aluminum Fin
Airflow.....790 CFM
Current Draw.....9 amps @ 12VDC
Fan.....11" Condenser Fan

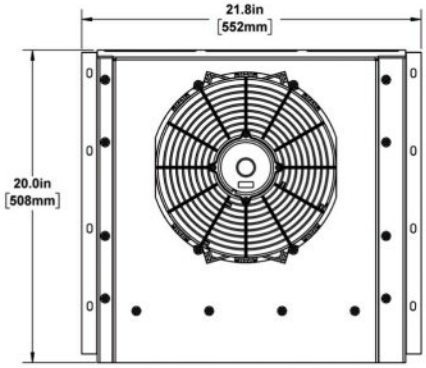

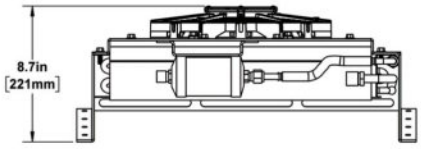

IMACA CONDITIONS

Capacity shown at IMACA conditions: 100°F (38°C) Ambient-Condenser/ 90°F (32°C) DB & 75°F (24°C) WB / 50% RH and condensing temperature of 135°F (57°C)

SERVICE PARTS	PART NO.
Condenser Coil	420-909
Condenser Fan - 11", 12VDC Puller	3562
Receiver Drier	7140

OPTIONS

- 24VDC Available Upon Request
- Stainless Steel Shroud

Having trouble finding the right part for your application? We can help!

If you don't find what you are looking for, reach out and our team will custom build exactly the system you need. Contact Omega HD at sales@omegahd.com.

© 2026 Omega Heavy Duty

Condensers

420-904-100
TUBE AND FIN

The 420-904-100 unit is a mid-profile condenser featuring a 2 row copper/aluminum coil, 16GA steel shroud, and dual 10" power fans for efficient, reliable cooling in compact installations.

420-904-100-12.....12VDC
420-904-100.....24VDC



SPECIFICATIONS

Size/Dimension.....27.7" L x 16.1"W x 4.8"H
BTU/Capacity.....31,000 BTU/hr
Weight .....25 lbs
Condenser Coil.....Copper Tubing Aluminum Fin
Airflow.....1400 CFM
Current Draw .....16 amps @ 12VDC
8 amps @ 24VDC
Fan.....10" Condenser Fans

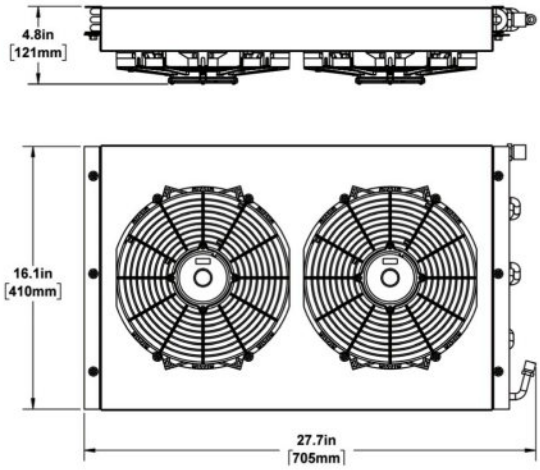

IMACA CONDITIONS

Capacity shown at IMACA conditions: 100°F (38°C)
Ambient-Condenser/ 90°F (32°C) DB & 75°F (24°C)
WB / 50% RH and condensing temperature of 135°F (57°C)

SERVICE PARTS	PART NO.
Condenser Coil	420-904
Condenser Fan - 10", 12VDC Puller	3560
Condenser Fan - 10", 24VDC Puller	3561

OPTIONS

- Variety of Mounting and Standoff Brackets
- Aluminum Shroud
- Different Size Assemblies Available Upon Request. See Condenser Coil List.

Having trouble finding the right part for your application? We can help!
If you don't find what you are looking for, reach out and our team will custom build exactly the system you need. Contact Omega HD at sales@omegahd.com.

© 2026 Omega Heavy Duty

Condensers

HA-977G2-500

TUBE AND FIN

The HA-977-G2 condenser is designed for rugged mining applications. It features a copper/aluminum coil with a steel shroud and one 14" power fan providing high output for its size.



HA-977G2-500-12.....12VDC
HA-977G2-500.....24VDC

SPECIFICATIONS

Size/Dimension..... 23.1" L x 17.6" W x 6.2" H
BTU/Capacity..... 34,500 BTU/hr
Weight ..... 25 lbs
Condenser Coil..... Copper Tubing Aluminum Fin
Airflow..... 975 CFM
Current Draw ..... 8 amps @ 12VDC
4 amps @ 24VDC
Fan..... 14" Condenser Fan

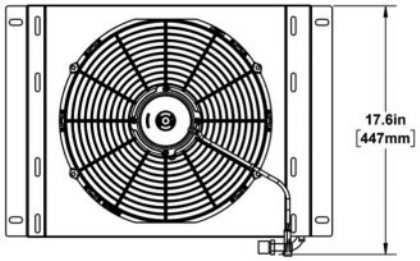

IMACA CONDITIONS

Capacity shown at IMACA conditions: 100°F (38°C) Ambient-Condenser/ 90°F (32°C) DB & 75°F (24°C) WB / 50% RH and condensing temperature of 135°F (57°C)

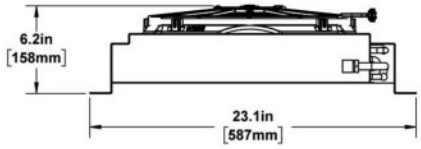

SERVICE PARTS	PART NO.
Condenser Coil	420-909
Condenser Fan - 14", 12VDC Puller	3571
Condenser Fan - 14", 24VDC Puller	3572

Having trouble finding the right part for your application? We can help!

If you don't find what you are looking for, reach out and our team will custom build exactly the system you need. Contact Omega HD at sales@omegahd.com.

© 2026 Omega Heavy Duty

Condensers

43-3040
TUBE AND FIN

The 3040 aluminum single-fan wedge condenser provides high capacity in a small package. The condenser can be ordered to mount above deck or below deck. Available with left-hand or right-hand side refrigeration and electrical connection points.

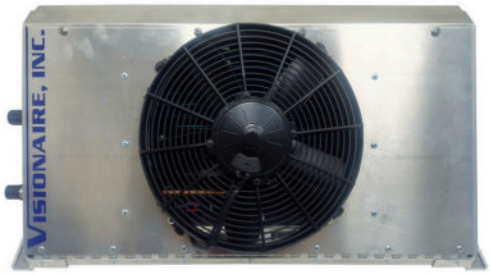

43-3040-1112.....12VDC Above Deck Mount
43-3040-2112.....24VDC Above Deck Mount
43-3040-1112U.....12VDC Below Deck Mount
43-3040-2112U.....24VDC Below Deck Mount

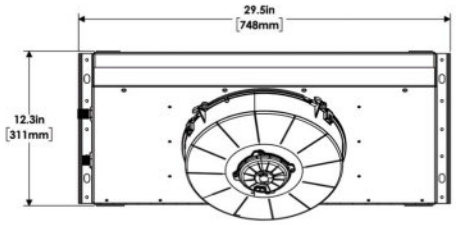

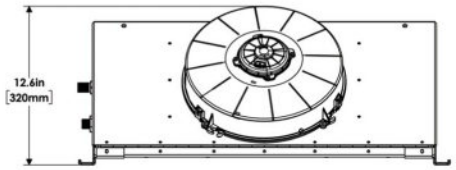



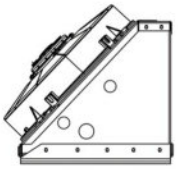

SPECIFICATIONS

Size/Dimension	29.5” L x 12.3” W x 12.6” H
BTU/Capacity	36,900 BTU/hr
Weight	40 lbs
Condenser Coil	Copper Tubing Aluminum Fin
Airflow	1430 CFM
Current Draw	23 amps @ 12VDC 13 amps @ 24VDC
Fan	12” Condenser Fan

IMACA CONDITIONS

Capacity shown at IMACA conditions: 100°F (38°C)
Ambient-Condenser/ 90°F (32°C) DB & 75°F (24°C)
WB / 50% RH and condensing temperature of 135°F (57°C)

SERVICE PARTS	PART NO.
Condenser Coil	10-10-3040
Condenser Fan - 12”, 12VDC Puller	14-10-1230
Condenser Fan - 12”, 24VDC Puller	14-10-1231
Receiver Drier	13-10-1011
Pressure Switch, Binary	1512
Relay, 12VDC	1261
Relay, 24VDC	1262

Having trouble finding the right part for your application? We can help!
If you don’t find what you are looking for, reach out and our team will custom build exactly the system you need. Contact Omega HD at sales@omegahd.com.

© 2026 Omega Heavy Duty

Condensers

POWER CONDENSER ASSEMBLIES

43-3010

TUBE AND FIN

The 3010 condenser is versatile and rugged. Ideal for use in high dust environments. Constructed from steel and finished with a durable gloss white powder coat finish. The 3010 can be mounted to horizontal or vertical surfaces.



43-3010-1000-12VDC.....12VDC
43-3010-2000-24VDC.....24VDC

SPECIFICATIONS

Size/Dimension.....20.4" L x 15.2" W x 10.2" H
BTU/Capacity.....39,000 BTU/hr
Weight.....36 lbs
Condenser Coil.....Copper Tubing Aluminum Fin
Airflow.....1285 CFM
Current Draw.....11 amps @ 12VDC
5.5 amps @ 24VDC
Fan.....14" Condenser Fan

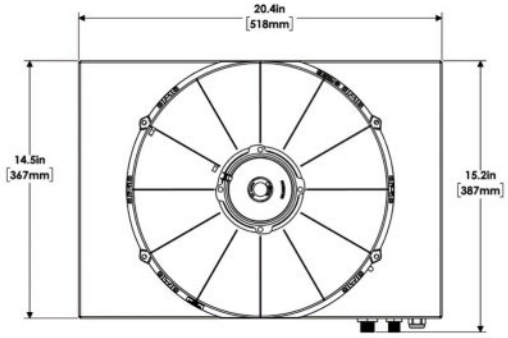

IMACA CONDITIONS

Capacity shown at IMACA conditions: 100°F (38°C) Ambient-Condenser/ 90°F (32°C) DB & 75°F (24°C) WB / 50% RH and condensing temperature of 135°F (57°C)

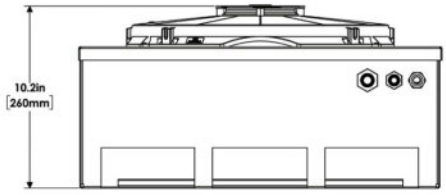

SERVICE PARTS	PART NO.
Condenser Coil	10-10-0060
Condenser Fan - 14", 12VDC Puller	3571MP
Condenser Fan - 14", 24VDC Puller	3572MP

Having trouble finding the right part for your application? We can help!

If you don't find what you are looking for, reach out and our team will custom build exactly the system you need. Contact Omega HD at sales@omegahd.com.

© 2026 Omega Heavy Duty

Condensers

43-3060
TUBE AND FIN

The 3060 single-fan condenser is designed for larger cab applications. It can be mounted horizontally or vertically. Steel construction, finished with a durable gloss white powder coat finish. Includes a receiver drier and binary pressure switch.



43-3060-1112.....12VDC

43-3060-2112.....24VDC

SPECIFICATIONS

Size/Dimension.....27.1" L x 23.6" W x 9" H
BTU/Capacity.....44,400 BTU/hr
Weight .....50 lbs
Condenser Coil.....Copper Tubing Aluminum Fin
Airflow.....1535 CFM
Current Draw .....12 amps @ 12VDC
6 amps @ 24VDC
Fan.....16" Condenser Fan

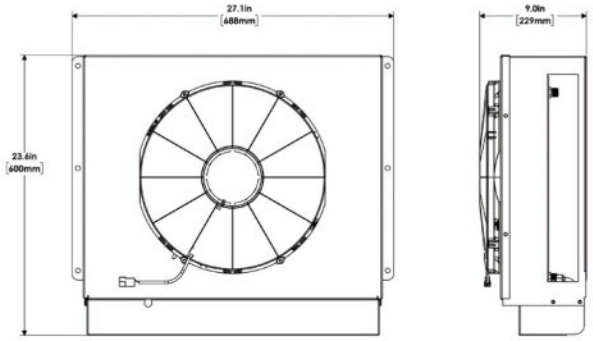

IMACA CONDITIONS

Capacity shown at IMACA conditions: 100°F (38°C) Ambient-Condenser/ 90°F (32°C) DB & 75°F (24°C) WB / 50% RH and condensing temperature of 135°F (57°C)

SERVICE PARTS	PART NO.
Condenser Coil	10-10-7070
Condenser Fan - 16", 12VDC Puller	3568MP
Condenser Fan - 16", 24VDC Puller	3569MP
Receiver Drier	7541
Pressure Switch, Binary	1512
Relay, 12VDC	1261
Relay, 24VDC	1262

Having trouble finding the right part for your application? We can help!

If you don't find what you are looking for, reach out and our team will custom build exactly the system you need. Contact Omega HD at sales@omegahd.com.

© 2026 Omega Heavy Duty

Condensers

POWER CONDENSER ASSEMBLIES

891027

TUBE AND FIN



The 891027 is a high-profile, high-capacity rooftop condenser featuring a black textured, powder-coated 16GA satin coat steel housing and dual 10" power fans. Cam locks allow quick access to the 4-row copper/aluminum coil, enabling easy cleaning.

891027-12VD.....12VDC
891027-24VD.....24VDC

SPECIFICATIONS

Size/Dimension.....27.9"L x 17" W x 8.4" H
BTU/Capacity.....47,000 BTU/hr
Weight .....35 lbs
Condenser Coil.....Copper Tubing Aluminum Fin
Airflow.....1500 CFM
Current Draw .....14 amps @ 12VDC
8 amps @ 24VDC
Fan.....10" Condenser Fans

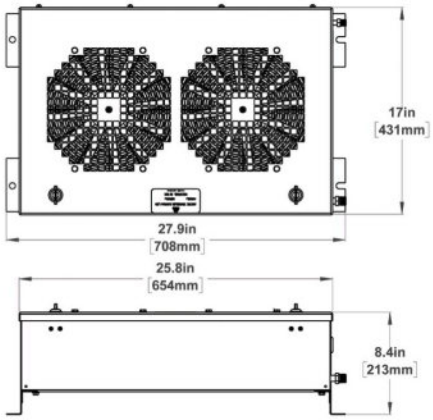

IMACA CONDITIONS

Capacity shown at IMACA conditions: 100°F (38°C) Ambient-Condenser/ 90°F (32°C) DB & 75°F (24°C) WB / 50% RH and condensing temperature of 135°F (57°C)

SERVICE PARTS	PART NO.
Condenser Coil, Blue Fin	875117
Condenser Fan - 10", 12VDC Pusher	3583
Condenser Fan - 10", 24VDC Pusher	3584

Having trouble finding the right part for your application? We can help!

If you don't find what you are looking for, reach out and our team will custom build exactly the system you need. Contact Omega HD at sales@omegahd.com.

© 2026 Omega Heavy Duty

43-3045

TUBE AND FIN



The 3045 dual-fan wedge condenser delivers increased condensing capacity in the same compact footprint as the 3040. Constructed from brushed-finish aluminum, it is available with left-hand or right-hand refrigeration/electrical connections. Can be ordered to mount above-deck or below-deck for versatile, high-performance installations.

43-3045-1112.....12VDC Above Deck Mount
43-3045-2112.....24VDC Above Deck Mount
43-3045-1112U.....12VDC Below Deck Mount
43-3045-2112U.....24VDC Below Deck Mount

SPECIFICATIONS

Size/Dimension..... 29.5" L x 12.5"W x 11.9" H
BTU/Capacity..... 47,900 BTU/hr
Weight ..... 40 lbs
Condenser Coil..... Copper Tubing Aluminum Fin
Airflow..... 2195 CFM
Current Draw ..... 23 amps @ 12VDC
13 amps @ 24VDC
Fan..... 12" Condenser Fan

IMACA CONDITIONS

Capacity shown at IMACA conditions: 100°F (38°C) Ambient-Condenser/ 90°F (32°C) DB & 75°F (24°C) WB / 50% RH and condensing temperature of 135°F (57°C)

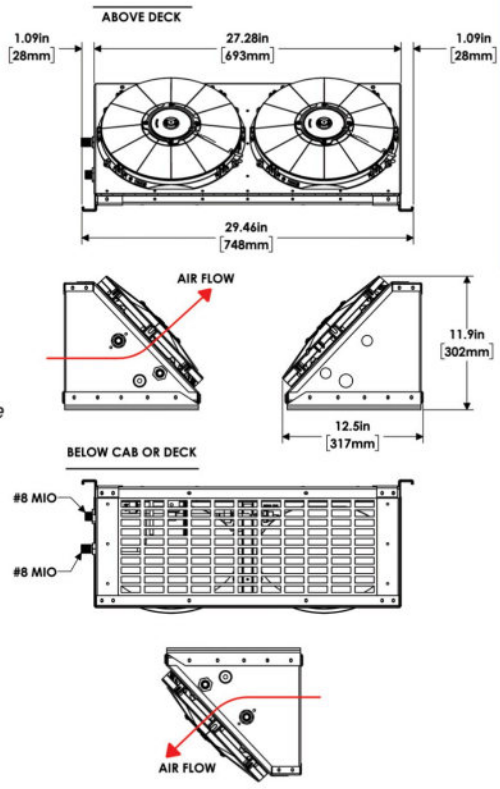

SERVICE PARTS	PART NO.
Condenser Coil	10-10-3040
Condenser Fan - 12", 12VDC Puller	3564MP
Condenser Fan - 12", 24VDC Puller	25-14815-25
Receiver Drier	13-10-1011
Pressure Switch, Binary	1512
Relay, 12VDC	1261
Relay, 24VDC	1262

Having trouble finding the right part for your application? We can help!

If you don't find what you are looking for, reach out and our team will custom build exactly the system you need. Contact Omega HD at sales@omegahd.com.

© 2026 Omega Heavy Duty

Condensers

POWER CONDENSER ASSEMBLIES

43-3085

TUBE AND FIN



The 3085 is a slim, dual-fan, high-capacity condenser designed for horizontal or vertical mounting, featuring two long-life fans and a durable gloss white powder-coated 16GA steel housing and includes a receiver drier with mounting point that accomodates vertical or horizontal mounting.

43-3085-1000.....12VDC

43-3085-2000.....24VDC

SPECIFICATIONS

Size/Dimension.....37.2" L x 18.4" W x 8.9" H
BTU/Capacity.....63,100 BTU/hr
Weight.....52 lbs
Condenser Coil.....Copper Tubing Aluminum Fin
Airflow.....3910 CFM
Current Draw.....32 amps @ 12VDC
16 amps @ 24VDC
Fan.....16" Condenser Fans

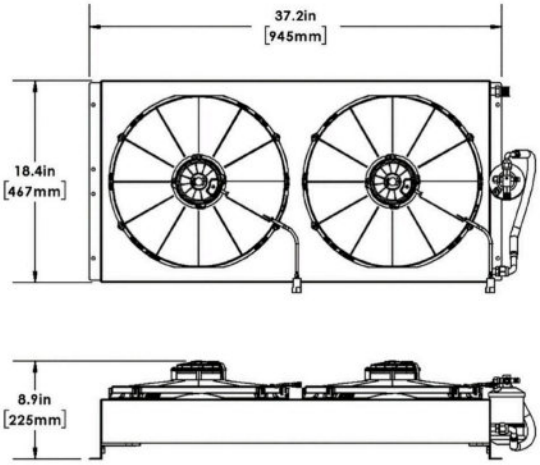

IMACA CONDITIONS

Capacity shown at IMACA conditions: 100°F (38°C) Ambient-Condenser/ 90°F (32°C) DB & 75°F (24°C) WB / 50% RH and condensing temperature of 135°F (57°C)

SERVICE PARTS	PART NO.
Condenser Coil	10-10-3085
Condenser Fan - 16", 12VDC Puller	3568HP
Condenser Fan - 16", 24VDC Puller	3569HP
Receiver Drier	7123

Having trouble finding the right part for your application? We can help!

If you don't find what you are looking for, reach out and our team will custom build exactly the system you need. Contact Omega HD at sales@omegahd.com.

omegahd.com

© 2026 Omega Heavy Duty

891029-12V

TUBE AND FIN

The 891029-12V is a high-capacity, roof-mounted condenser featuring a copper/aluminum coil, 12GA aluminum shell, and dual 11" power fans. The unit is finished with a molded ABS plastic cover, providing both long-term durability and an attractive, clean appearance.



891029-12V.....12VDC

SPECIFICATIONS

Size/Dimension.....51.7"L x 33.5" W x 7.7" H
BTU/Capacity.....65,000 BTU/hr
Weight .....60 lbs
Condenser Coil.....Copper Tubing Aluminum Fin
Airflow.....1860 CFM
Current Draw .....21 amps @ 12VDC
Fan.....11" Condenser Fans

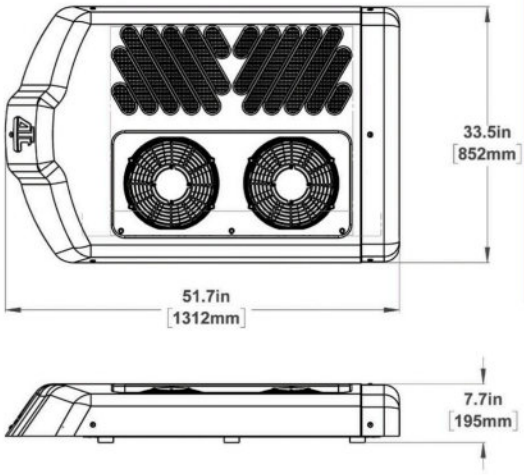

IMACA CONDITIONS

Capacity shown at IMACA conditions: 100°F (38°C) Ambient-Condenser/ 90°F (32°C) DB & 75°F (24°C) WB / 50% RH and condensing temperature of 135°F (57°C)

SERVICE PARTS	PART NO.
Condenser Coil, Blue Fin	M970273
Condenser Fan - 11", 12VDC Puller	25-14852-S
Receiver Drier	7502
Refrigerant Sight Glass	4150

Having trouble finding the right part for your application? We can help!

If you don't find what you are looking for, reach out and our team will custom build exactly the system you need. Contact Omega HD at sales@omegahd.com.

© 2026 Omega Heavy Duty

Condensers

43-3080

TUBE AND FIN

The 3080 condenser is a 3-fan high-capacity unit with a brushed aluminum housing and coil guard. Ideal for use with large or multiple mid-size evaporators. The unit can be ordered for mounting above deck or below-deck and includes a receiver drier. The 3080 incorporates a relay and high pressure switch.



43-3080-1111.....12VDC Under Mount
43-3080-2111.....24VDC Under Mount
43-3080U-1111.....12VDC Above Mount
43-3080U-2111.....24VDC Above Mount

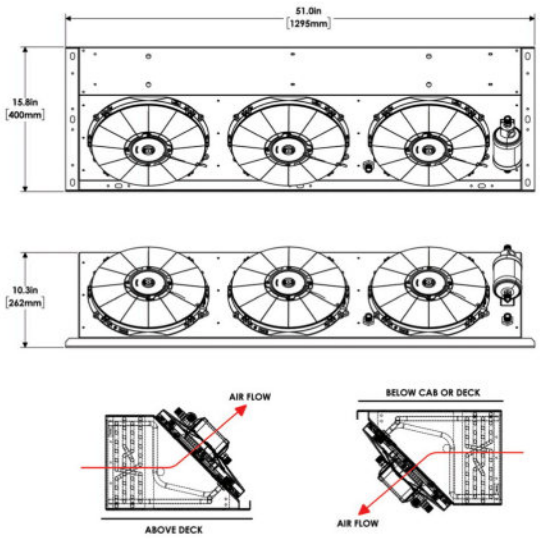

SPECIFICATIONS

Size/Dimension.....51" L x 15.8" W x 10.3" H
BTU/Capacity.....54,000 BTU/hr
Weight.....50 lbs
Condenser Coil.....Copper Tubing Aluminum Fin
Airflow.....3000 CFM
Current Draw.....15 amps @ 12VDC
7.5 amps @ 24VDC
Fan.....12" Condenser Fans

IMACA CONDITIONS

Capacity shown at IMACA conditions: 100°F (38°C) Ambient-Condenser/ 90°F (32°C) DB & 75°F (24°C) WB / 50% RH and condensing temperature of 135°F (57°C)

SERVICE PARTS	PART NO.
Condenser Coil, Blue Fin	10-10-3080
Condenser Fan - 12", 12VDC Puller	3564MP
Condenser Fan - 12", 24VDC Puller	25-14815-25
Receiver Drier	13-10-1011
Pressure Switch, High	12-10-1004
Relay, 12V	12-53-2003
Relay, 24V	12-53-4003
Wiring Harness	33-3080-001

OPTIONS

- Evaporator
- Compressor
- Refrigerant Hose Kit

Having trouble finding the right part for your application? We can help!

If you don't find what you are looking for, reach out and our team will custom build exactly the system you need. Contact Omega HD at sales@omegahd.com.

© 2026 Omega Heavy Duty

43-3081

TUBE AND FIN



The 3081 condenser is a 3-fan high-capacity unit with a brushed aluminum finish. Ideal for use with large or multiple mid-size evaporators. This unit ships below deck but can be modified at install to either configuration.

43-3081-1000.....12VDC

43-3081-2000.....24VDC

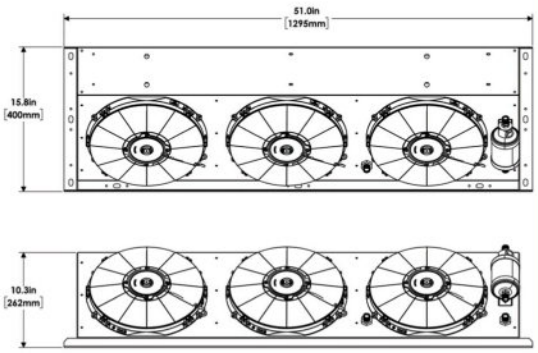

SPECIFICATIONS

Size/Dimension..... 51" L x 15.8" W x 10.3" H
BTU/Capacity..... 71,000 BTU/hr
Weight ..... 50 lbs
Condenser Coil..... Copper Tubing Aluminum Fin
Airflow..... 3295 CFM
Current Draw ..... 30 amps @ 12VDC
15 amps @ 24VDC
Fan..... 12" Condenser Fans

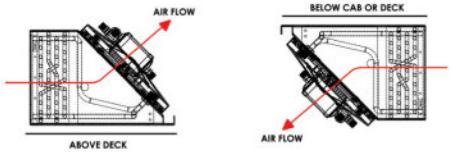

IMACA CONDITIONS

Capacity shown at IMACA conditions: 100°F (38°C) Ambient-Condenser/ 90°F (32°C) DB & 75°F (24°C) WB / 50% RH and condensing temperature of 135°F (57°C)

SERVICE PARTS.....	PART NO.
Condenser Coil, Blue Fin.....	10-10-3081
Condenser Fan - 12", 12VDC Puller.....	3564MP
Condenser Fan - 12", 24VDC Puller.....	25-14815-25
Receiver Drier.....	13-10-1011

Having trouble finding the right part for your application? We can help!

If you don't find what you are looking for, reach out and our team will custom build exactly the system you need. Contact Omega HD at sales@omegahd.com.

© 2026 Omega Heavy Duty

POWER CONDENSER ASSEMBLIES

MULTIFLOW CONDENSERS

© 2026 Omega Heavy Duty

420-855-NEXG

MULTIFLOW



The 420-855-NEXG unit is a low-profile condenser featuring a high-efficiency aluminum multiflow coil and dual 10" power fans, designed for reliable performance in tight installation spaces.

420-855-NEXG.....12VDC

420-855-NEXG-24.....24VDC

SPECIFICATIONS

Size/Dimension..... 26.5" L x 12.2" W x 5.4" H
BTU/Capacity..... 18,000 BTU/hr
Weight ..... 13 lbs
Condenser Coil..... Aluminum Multiflow
Airflow..... 1400 CFM
Current Draw ..... 6 amps @ 12VDC
4 amps @ 24VDC
Fan..... 10" Condenser Fans

IMACA CONDITIONS

N/A

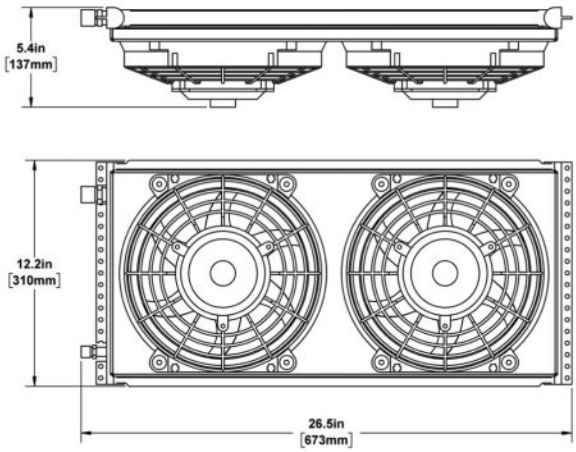

SERVICE PARTS	PART NO.
Condenser Coil	6306
Condenser Fan - 10", 12VDC Puller	430-040-DFW
Condenser Fan - 10", 24VDC Puller	3561

OPTIONS

- Variety of Mounting and Standoff Brackets
- Aluminum Shroud

Having trouble finding the right part for your application? We can help!

If you don't find what you are looking for, reach out and our team will custom build exactly the system you need. Contact Omega HD at sales@omegahd.com.

© 2026 Omega Heavy Duty

Condensers

POWER CONDENSER ASSEMBLIES

43-3025
MULTIFLOW

The 3025 is a rugged, low-profile condenser perfect for mounting to cab where space is limited. Pairs well with any 16,000-20,000 BTU evaporator. Available with optional attached drier. Finished with a durable gloss white powder coated finish.



43-3025-1000.....12VDC Condenser
43-3025-2000.....24VDC Condenser
43-3025-1100.....12VDC Condenser w/ Drier
43-3025-2100.....24VDC Condenser w/ Drier

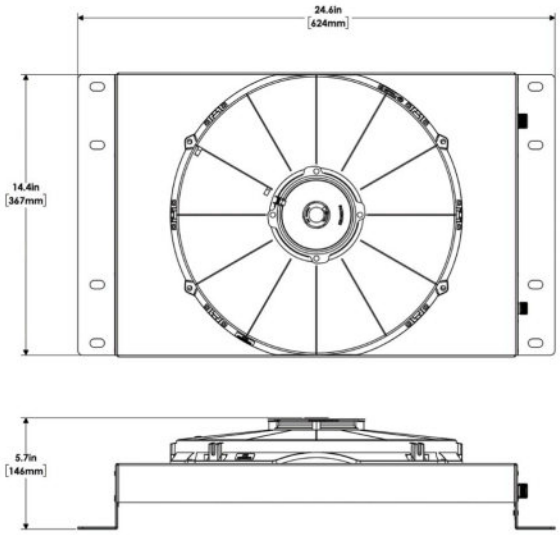

SPECIFICATIONS

Size/Dimension.....24.6" L x 14.4" W x 5.7" H
BTU/Capacity.....24,000 BTU/hr
Weight.....36 lbs
Condenser Coil.....Aluminum Multiflow
Airflow.....1285 CFM
Current Draw.....11 amps @ 12VDC
5.5 amps @ 24VDC
Fan.....14" Condenser Fan

IMACA CONDITIONS

N/A

SERVICE PARTS.....PART NO.	OPTIONS
Condenser Coil.....10-10-3025	• Attached Drier
Condenser Fan - 14", 12VDC Puller.....3571MP	
Condenser Fan - 14", 24VDC Puller.....3572MP	
Receiver Drier.....7502	

Having trouble finding the right part for your application? We can help!
If you don't find what you are looking for, reach out and our team will custom build exactly the system you need. Contact Omega HD at sales@omegahd.com.

© 2026 Omega Heavy Duty

891005

MULTIFLOW



The 891005 is a low-profile condenser constructed with a black textured, powder-coated 14GA satin coat steel housing and dual 10" power fans. Its aluminum multiflow coil delivers high heat-rejection performance, while the robust enclosure design allows the unit to also be roof or wall mounted.

891005-12V.....12VDC

891005-12VD.....12VDC With Connector

891005-24V.....24VDC

891005-24VD.....24VDC With Connector

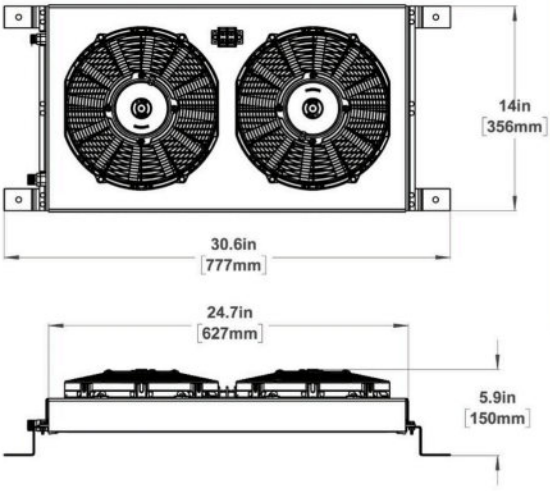

SPECIFICATIONS

Size/Dimension.....30.6"L x 14" W x 5.9" H
BTU/Capacity.....28,000 BTU/hr
Weight.....15 lbs
Condenser Coil.....Aluminum Multiflow
Airflow.....1400 CFM
Current Draw.....14 amps @ 12VDC
7 amps @ 24VDC
Fan.....10" Condenser Fans

IMACA CONDITIONS

N/A

SERVICE PARTS	PART NO.
Condenser Coil	6310
Condenser Fan - 10", 12VDC Puller	3560
Condenser Fan - 10", 24VDC Puller	3561

Having trouble finding the right part for your application? We can help!

If you don't find what you are looking for, reach out and our team will custom build exactly the system you need. Contact Omega HD at sales@omegahd.com.

© 2026 Omega Heavy Duty

Condensers

POWER CONDENSER ASSEMBLIES

43-3030

MULTIFLOW

The 3030 condenser can be mounted horizontally or vertically. Ideal for use with any mid-size evaporator. Finished with a durable gloss white powder coat on 16GA steel. Includes a binary pressure switch, relay, and drier.



43-3030-1112.....12VDC
43-3030-2112.....24VDC

SPECIFICATIONS

Size/Dimension.....29.7"L x 17.6"W x 8.1" H
BTU/Capacity.....32,000 BTU/hr
Weight .....38 lbs
Condenser Coil.....Aluminum Multiflow
Airflow.....1500 CFM
Current Draw .....15 amps @ 12VDC
7 amps @ 24VDC
Fan.....12" Condenser Fan

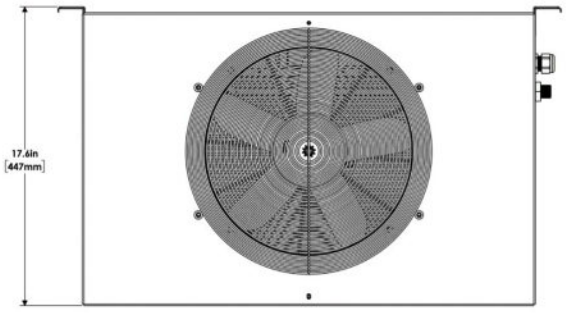

IMACA CONDITIONS

N/A

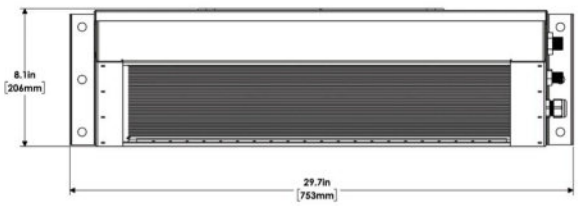

SERVICE PARTS	PART NO.
Condenser Coil	10-10-3030
Condenser Fan - 12", 12VDC Pusher	3600
Condenser Fan - 12", 24VDC Pusher	3601
Receiver Drier	7502
Pressure Switch, Binary	1512
Relay, 12VDC	1261
Relay, 24VDC	1262

OPTIONS

- Vertical Mount Tube.....35-7060-022

Having trouble finding the right part for your application? We can help!

If you don't find what you are looking for, reach out and our team will custom build exactly the system you need. Contact Omega HD at sales@omegahd.com.

© 2026 Omega Heavy Duty

HA-241202

MULTIFLOW



The HA-241202 features double stacked multiflow coils with two 10" power fans. Performs admirably in a compact form, allowing high heat rejection when space is limited.

HA-241202-500.....12VDC
HA-241202-550.....24VDC

SPECIFICATIONS

Size/Dimension..... 27.8" L x 12.3" W x 5.3" H
BTU/Capacity..... 42,000 BTU/hr
Weight ..... 20 lbs
Condenser Coil..... 2x Aluminum Multiflow
Airflow..... 1400 CFM
Current Draw ..... 16 amps @ 12VDC
8 amps @ 24VDC
Fan..... 10" Condenser Fans

IMACA CONDITIONS

N/A

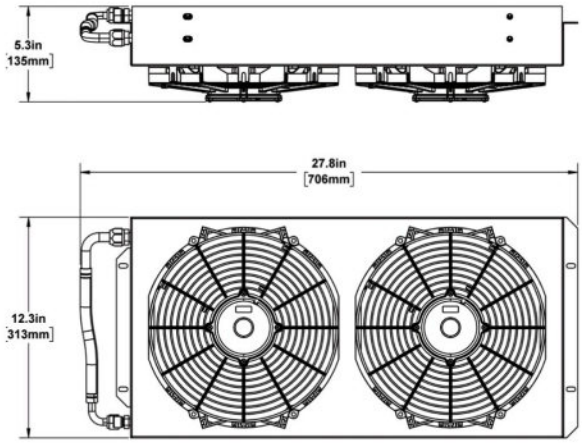

SERVICE PARTS	PART NO.
Condenser Coil	24-30228
Condenser Fan - 10", 12VDC Puller	3560
Condenser Fan - 10", 24VDC Puller	3561

OPTIONS

- Variety of Mounting and Standoff Brackets

Having trouble finding the right part for your application? We can help!

If you don't find what you are looking for, reach out and our team will custom build exactly the system you need. Contact Omega HD at sales@omegahd.com.

© 2026 Omega Heavy Duty

Condensers

POWER CONDENSER ASSEMBLIES

43-3062-1000
MULTIFLOW

The 3062 condenser is a 2-fan below deck skirt-mounted system and appropriate for bus applications. The unit includes a receiver drier and high-pressure switch. Finished with a matte-black textured powder coat on 16GA steel to extend its service life.



43-3062-1000.....12VDC

SPECIFICATIONS

Size/Dimension.....35.8" L x 13.8" W x 10.4" H
BTU/Capacity.....64,800 BTU/hr
Weight.....44 lbs
Condenser Coil.....Aluminum Multiflow
Airflow.....1700 CFM
Current Draw.....16.2 amps @ 12VDC
Fan.....11" Condenser Fans

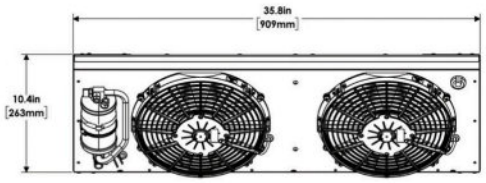

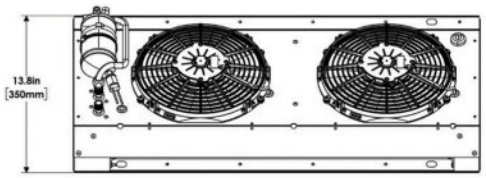

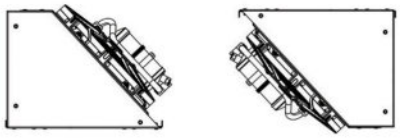

IMACA CONDITIONS

N/A

SERVICE PARTS	PART NO.
Condenser Coil	10-10-3062
Condenser Fan - 11", 12VDC Puller	3562
Receiver Drier	13-10-1016
Pressure Switch, High	12-10-1009

Having trouble finding the right part for your application? We can help!

If you don't find what you are looking for, reach out and our team will custom build exactly the system you need. Contact Omega HD at sales@omegahd.com.

© 2026 Omega Heavy Duty

43-3082

MULTIFLOW



The 3082 is a high-capacity, three-fan below deck skirt-mounted condenser engineered for demanding bus applications. It includes an integrated high-pressure switch and receiver drier. A durable black matte textured powder-coat finish on a rugged steel housing ensures long service life in harsh operating environments. Both fittings are #8 MIO.

43-3082-1000.....12VDC Below Deck Mount
43-3082-2000.....24VDC Below Deck Mount

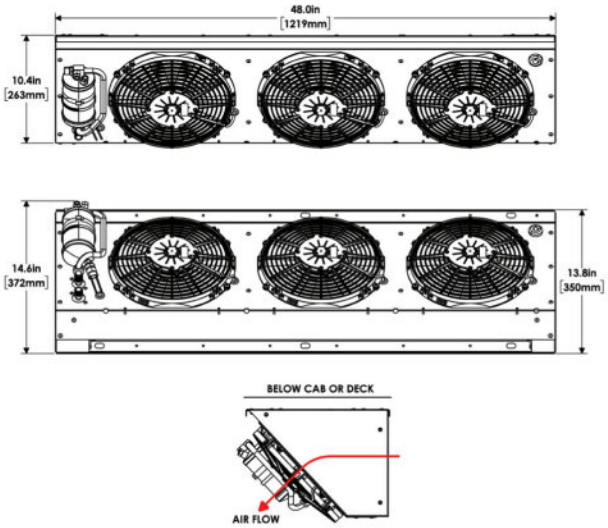

SPECIFICATIONS

Size/Dimension.....48" L x 13.8" W x 10.4" H
BTU/Capacity.....85,000 BTU/hr
Weight .....51 lbs
Condenser Coil.....Aluminum Multiflow
Airflow.....2532 CFM
Current Draw .....25 amps @ 12VDC
12.2 amps @ 24VDC
Fan.....11" Condenser Fan

IMACA CONDITIONS

N/A

SERVICE PARTS	PART NO.
Condenser Coil	10-10-3082
Condenser Fan - 11", 12VDC Puller	3562
Condenser Fan - 11", 24VDC Puller	3563
Receiver Drier	13-10-1016
Pressure Switch, High	12-10-1009

Having trouble finding the right part for your application? We can help!

If you don't find what you are looking for, reach out and our team will custom build exactly the system you need. Contact Omega HD at sales@omegahd.com.

© 2026 Omega Heavy Duty

Condensers

POWER CONDENSER ASSEMBLIES

43-3083

MULTIFLOW



The 3083 is a high-capacity, three-fan below deck skirt-mounted condenser engineered for demanding bus applications. It includes an integrated high-pressure switch and receiver drier. A durable black matte textured powder-coat finish on a rugged steel housing ensures long service life in harsh operating environments. #8 intake fitting and #10 discharge fitting.

43-3083-1000.....12VDC
43-3083-2000.....24VDC

SPECIFICATIONS

Size/Dimension..... 48" L x 13.8" W x 10.4 H
BTU/Capacity..... 85,000 BTU/hr
Weight ..... 51 lbs
Condenser Coil..... Aluminum Multiflow
Airflow..... 2532 CFM
Current Draw ..... 25 amps @ 12VDC
12.2 amps @ 24VDC
Fan..... 11" Condenser Fan

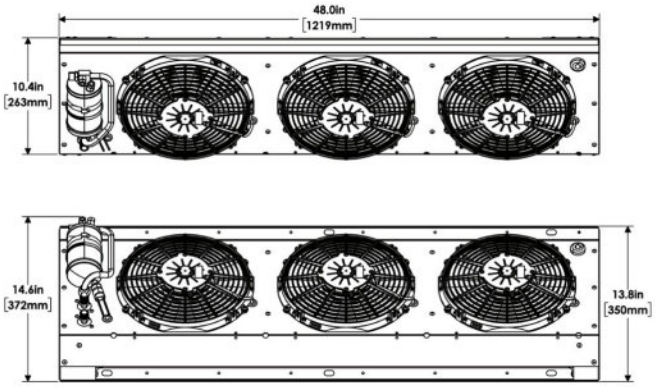

IMACA CONDITIONS

N/A

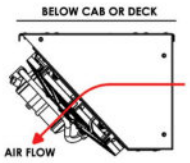

SERVICE PARTS	PART NO.
Condenser Coil	10-10-3082
Condenser Fan - 11", 12VDC Puller	3562
Condenser Fan - 11", 24VDC Puller	3563
Receiver Drier	13-10-1016
Pressure Switch, High	12-10-1009
Adapter Harness	33-3083-001

Having trouble finding the right part for your application? We can help!

If you don't find what you are looking for, reach out and our team will custom build exactly the system you need. Contact Omega HD at sales@omegahd.com.

© 2026 Omega Heavy Duty

POWER CONDENSER ASSEMBLIES

HEAVY DUTY CONDENSERS

© 2026 Omega Heavy Duty

Condensers

POWER CONDENSER ASSEMBLIES

420-860-977
HEAVY DUTY

The 420-860-977 unit is a high output condenser with copper/aluminum coil and two 9” power fans in a 12GA steel shroud.



420-860-977-12.....12VDC
420-860-977.....24VDC

SPECIFICATIONS

Size/Dimension.....31.3” L x 10.5” W x 7.6” H
BTU/Capacity.....33,500 BTU/hr
Weight.....45 lbs
Condenser Coil.....Copper Tubing Aluminum Fin
Airflow.....1090 CFM
Current Draw.....12 amps @ 12VDC
6 amps @ 24VDC
Fan.....9” Condenser Fans

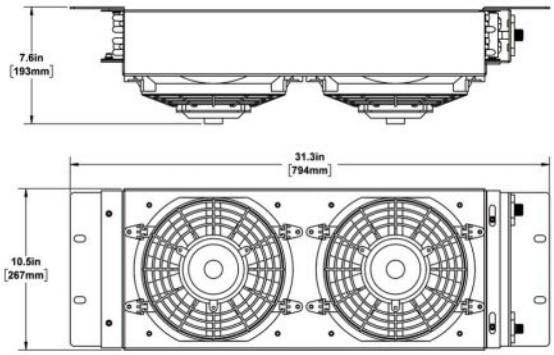

IMACA CONDITIONS

Capacity shown at IMACA conditions: 100°F (38°C)
Ambient-Condenser/ 90°F (32°C) DB & 75°F (24°C)
WB / 50% RH and condensing temperature of 135°F (57°C)

SERVICE PARTS	PART NO.
Condenser Coil	420-860-977-1
Condenser Fan - 9”, 12VDC Puller	3500
Condenser Fan - 9”, 24VDC Puller	430-008
Condenser Fan Mount Feet	3578
#6 Fitting Securing Lug	440-090
#8 Fitting Securing Lug	440-091

OPTIONS

- 3/16” Shroud
- “L” Bracket to hang off back of roof

Having trouble finding the right part for your application? We can help!

If you don’t find what you are looking for, reach out and our team will custom build exactly the system you need. Contact Omega HD at sales@omegahd.com.

© 2026 Omega Heavy Duty

HA-100

HEAVY DUTY



The HA-100 is a heavy duty unit featuring a copper/aluminum coil with 1/4" reinforced base plate and 3/16" heavy gauge shell. This condenser is ideal for the roughest environments

HA-100-12-HD-R.....12VDC Right Hand
HA-100-12-HD-L.....12VDC Left Hand
HA-100-24-HD-R.....24VDC Right Hand
HA-100-24-HD-L.....24VDC Left Hand
HA-100-12-HD-VERT.....12VDC Vertical
HA-100-24-HD-VERT.....24VDC Vertical

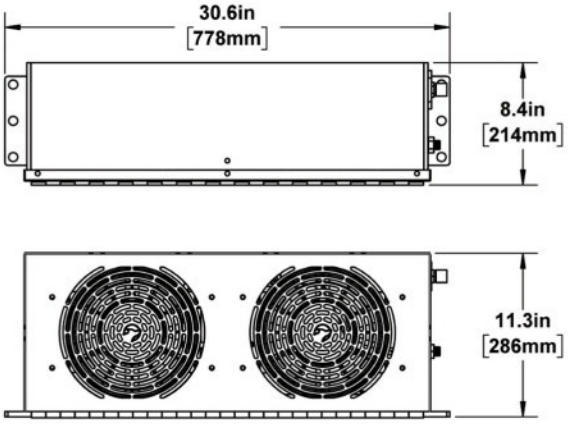

SPECIFICATIONS

Size/Dimension	30.6" L x 8.4" W x 11.3" H
BTU/Capacity	36,000 BTU/hr
Weight	75 lbs
Condenser Coil	Copper Tubing Aluminum Fin
Airflow	1200 CFM
Current Draw	12 amps @ 12VDC 6 amps @ 24VDC
Fan	9" Condenser Fans

IMACA CONDITIONS

Capacity shown at IMACA conditions: 100°F (38°C)
Ambient-Condenser/ 90°F (32°C) DB & 75°F (24°C)
WB / 50% RH and condensing temperature of 135°F (57°C)

SERVICE PARTS	PART NO.
Condenser Coil	420-860R 420-860L
Condenser Fan - 9", 12VDC Pusher	3581
Condenser Fan - 9", 24VDC Pusher	25-14824-90-24
Receiver Drier	7129
Receiver Drier - Vertical Setup	523-092-9
Receiver Drier Mount Bracket	523-100-HD
Condenser Fan Mount Feet	3578
Condenser Fan Plate Assembly	520-HD100-2A
Condenser Screen	HA-102
Hose Assembly - Drier to Bulkhead	635-038-HA100-16
Hose Assembly - Condenser to Drier	635-038-HA100-18

OPTIONS

- HA-100-ZA - Z Bracket Assembly for Behind Cab Mounting

© 2026 Omega Heavy Duty

Condensers

POWER CONDENSER ASSEMBLIES

HA-91

HEAVY DUTY

The HA-91 is a heavy duty unit featuring a copper/aluminum coil with 1/4" reinforced base plate and 3/16" heavy gauge shell. This condenser is ideal for the roughest environments.



HA-91-12-HD.....12VDC
HA-91-24-HD.....24VDC

SPECIFICATIONS

Size/Dimension.....24.6"L x 11"W x 13" H
BTU/Capacity.....39,200 BTU/hr
Weight.....75 lbs
Condenser Coil.....Copper Tubing Aluminum Fin
Airflow.....1340 CFM
Current Draw.....16 amps @ 12VDC
8 amps @ 24VDC
Fan.....10" Condenser Fans

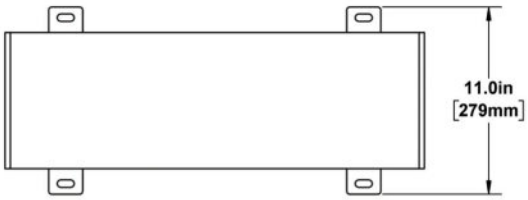

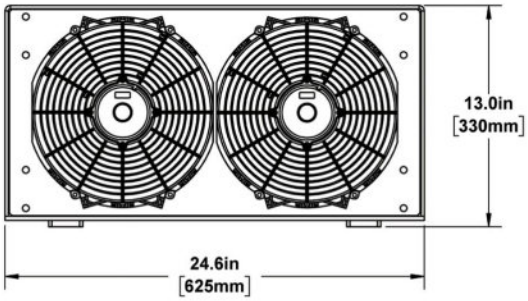

IMACA CONDITIONS

Capacity shown at IMACA conditions: 100°F (38°C)
Ambient-Condenser/ 90°F (32°C) DB & 75°F (24°C)
WB / 50% RH and condensing temperature of 135°F (57°C)

SERVICE PARTS	PART NO.
Condenser Coil	420-912
Condenser Fan - 10", 12VDC Pusher	3583
Condenser Fan - 10", 24VDC Pusher	3584

OPTIONS

- Puller Fans

Having trouble finding the right part for your application? We can help!

If you don't find what you are looking for, reach out and our team will custom build exactly the system you need. Contact Omega HD at sales@omegahd.com.

© 2026 Omega Heavy Duty

Condensers

43-3050-2000
HEAVY DUTY

The 3050 is a low-profile, 3-fan condenser designed for high performance in tight spaces. Featuring 3 long-life fans and a durable gloss white powder coat finish on a 12GA steel housing.



43-3050-2000.....24VDC

SPECIFICATIONS

Size/Dimension.....41.4"L x 14.2" W x 7.4" H
BTU/Capacity.....47,500 BTU/hr
Weight .....65 lbs
Condenser Coil.....Copper Tubing Aluminum Fin
Airflow.....1885 CFM
Current Draw .....12.3 amps @ 24VDC
Fan.....9" Condenser Fan

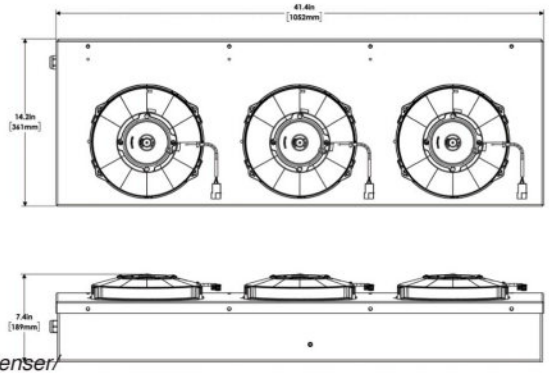

IMACA CONDITIONS

Capacity shown at IMACA conditions: 100°F (38°C) Ambient-Condenser/ 90°F (32°C) DB & 75°F (24°C) WB / 50% RH and condensing temperature of 135°F (57°C)

SERVICE PARTS	PART NO.
Condenser Coil	10-10-3050
Condenser Fan - 9", 24VDC Puller	3499

Having trouble finding the right part for your application? We can help!

If you don't find what you are looking for, reach out and our team will custom build exactly the system you need. Contact Omega HD at sales@omegahd.com.

© 2026 Omega Heavy Duty

Condensers

HA-100-3-LRG

HEAVY DUTY



The HA-100-3-LRG unit is a high-capacity condenser in a 12GA steel shell with three 10" power fans enabling high BTU output. This versitile condenser can be mounted above or below deck and includes a drier and binary switch.

HA-100-3-LRG-12.....12VDC
HA-100-3-LRG.....24VDC

SPECIFICATIONS

Size/Dimension.....40" L x 10.4" W x 12.6" H
BTU/Capacity.....63,450 BTU/hr
Weight.....75 lbs
Condenser Coil.....Copper Tubing Aluminum Fin
Airflow.....2100 CFM
Current Draw.....28 amps @ 12VDC
14 amps @ 24VDC
Fan.....10" Condenser Fans

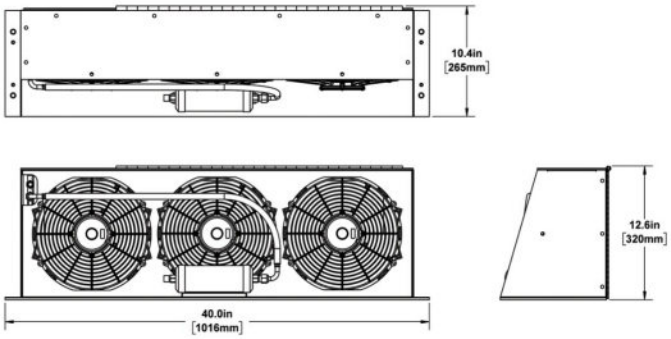

IMACA CONDITIONS

Capacity shown at IMACA conditions: 100°F (38°C)
Ambient-Condenser/ 90°F (32°C) DB & 75°F (24°C)
WB / 50% RH and condensing temperature of 135°F (57°C)

SERVICE PARTS	PART NO.
Condenser Coil	420-800A
Condenser Fan - 10", 12VDC Puller	3560
Condenser Fan - 10", 24VDC Puller	3561
Receiver Drier	7502
Condenser Screen	301-215-2
Pressure Switch, Binary	1512

OPTIONS

- Aluminum Casing

Having trouble finding the right part for your application? We can help!

If you don't find what you are looking for, reach out and our team will custom build exactly the system you need. Contact Omega HD at sales@omegahd.com.

© 2026 Omega Heavy Duty