2200 Series

print and apply systems

Markem-Imaje's commitment: to deliver best in class efficiency.

The 2200 Series builds on a proven concept providing reliability, efficiency and ease of use with thousands of units installed in demanding 24/7 environments. The 2200 Series takes print and apply to the next stage of evolution, giving you a wide range of interchangeable applicators, optimised operational intervention and unparalleled application rate.

Unmatched reliability

- Durable and rugged industrial design constructed around a central solid 38 mm thick backbone.
- High performance non-stick label pad and contact parts for easy to clean, uncomplicated operation.

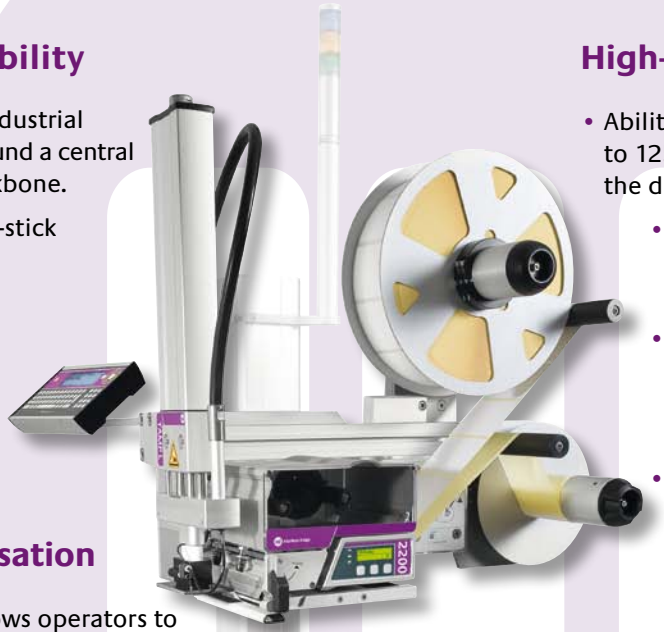

High-performance printing

- Ability to print and apply at rates up to 125 packs per minute regardless of the data complexity or content.
  - Dual RISC processors, supported by a dedicated ultra fast co-processor, deliver efficient performance.
  - Consistent label application of ± 0.25 mm via optimised label path, automatic label tension and integrated pad label sensor.
  - Markem-Imaje labels and ribbons guarantee print quality and long printhead life.

Operation optimisation

- Simple media path allows operators to reload label and ribbon rolls in less than 40 seconds.
- 660 m ribbon and label rolls compared with the market standard of 450 m to reduce the line stoppages by 45%.
- Synchronised label and ribbon change.
- "No tools" concept allows printhead and roller exchange in less than 60 seconds.
- CoLOS Terminal®, the new colour touch screen, enables easy selection of labels to be printed and powerful data management through an intuitive user interface.

Traceability

- Compliant ANSI grade A/B codes even at the highest application speed.
- Optional barcode scanner ensures that 100% of cases leave the factory with a readable barcode.
- Supports high speed real time data generation, including linear and 2D barcodes, graphics or serialisation.
- CoLOS software solutions ensure product data integrity, central data management and easy connection to existing enterprise database.

Eco-initiatives

- Designed to be over 95% recyclable.
- Compatible with recyclable liners.
- Power consumption below 35 watts in standby mode and 135 watts at maximum throughput.

markem·imaje
a DOVER company

2200 Series specifications

Print features

- Print methods: Thermal transfer or direct thermal
- Built-in real-time clock
- 10 individual programmable counters
- Print engines:
  - 2220: 56 mm, 200 dpi (8 dots per mm)
  - 2230: 54 mm, 300 dpi (12 dots per mm)
  - 2420: 104 mm, 200 dpi (8 dots per mm)
  - 2430: 108 mm, 300 dpi (12 dots per mm)
  - 2620: 168 mm, 200 dpi (8 dots per mm)
  - 2630: 162 mm, 300 dpi (12 dots per mm)
- Maximum print speed: 300 mm/s
- Fonts: 16 smooth scalable fonts available
- TrueType font downloadable
- Support for Unicode fonts
- Graphic features: BMP, WMF, PCX, PNG, ICO, GIF, TIFF, JPEG
- All major linear barcodes and 2D barcodes supported

Media specifications

- Media types: Die-cut self-adhesive labels
- Label stock outside wound as standard
- Maximum label width: 178 mm
- Maximum label roll: 350 mm
- Inner core: 76 mm
- Inside wound thermal transfer ribbon
- Ink ribbon length: 660 m
- Ribbon core: 25 mm

Operations

- User interface with graphic display and machine status in 26 languages
- Keypad: start, pause, print
- Communication interface:
  - 2 x In via Opto, 5 x Out via relay, 24 VDC
  - High speed RS-232, 300 – 115 200 bps
  - Ethernet 10/100 (LPD, R Telnet, FTP, web server)
  - USB for back up/restore and label upload (simple user interface)

Other characteristics

- Applicators:
  - Tamp, Blow, Wipe or Tamp Blow for top side and front applications
  - High Speed Front Apply
  - Corner Wrap for 2 adjacent side applications
- Humidity: 20 to 85% non-condensing
- Power requirements: 110/240 VAC; 50/60 Hz
- Air supply: 6 bars, dry and clean

Options and accessories

- Inside wound label kit
- Local industrial terminal with QWERTY keypad and backlit display
- Enhanced on board user interface:
  - Label selection
  - Machine back-up/restore or cloning
- Expanded memory SD card slot
- Scalable and international fonts
- Three-colour-status beacon
- Barcode reader
- Range of industrial stands
- CoLOS Terminal

Software

- Compatible with CoLOS Create Professional and CoLOS Enterprise
- CoLOS Traceability software
- Compatible with Weihenstephan standard

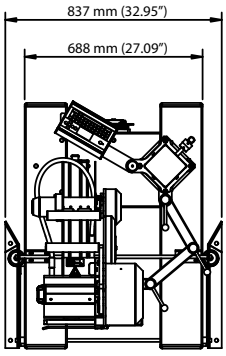

Dimensions refer to 2200 Tamp Long

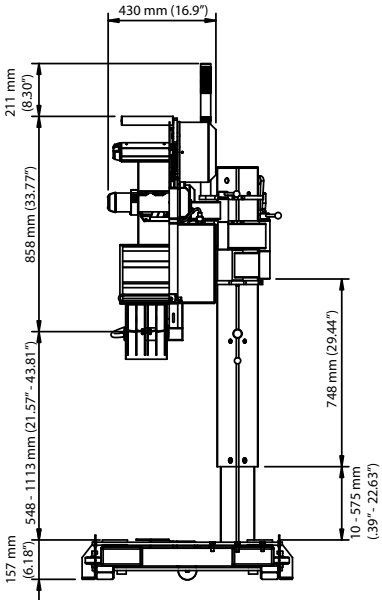

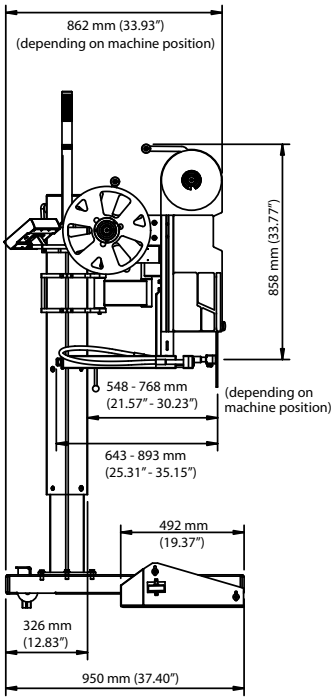

To learn more, scan the code with your smartphone or visit www.markem-imaje.co.uk

c UL us LISTED

The design and manufacturing plants of this product are ISO 9001 / ISO 14001 CERTIFIED

We reserve the right to amend the design and/or specifications of our products without notice.

MARKEM-IMAJE LTD
Brightgate House,
Brightgate Way Trafford Park,
MANCHESTER, M32 0TB
Tel: 0161 864 8100
Fax: 0161 864 8150

markem·imaje a DOVER company

Agency: www.lemeccanographiste.fr - Photos: Ginko
Printed in France on recycled paper - A43085 - E1