FORD F-SERIES

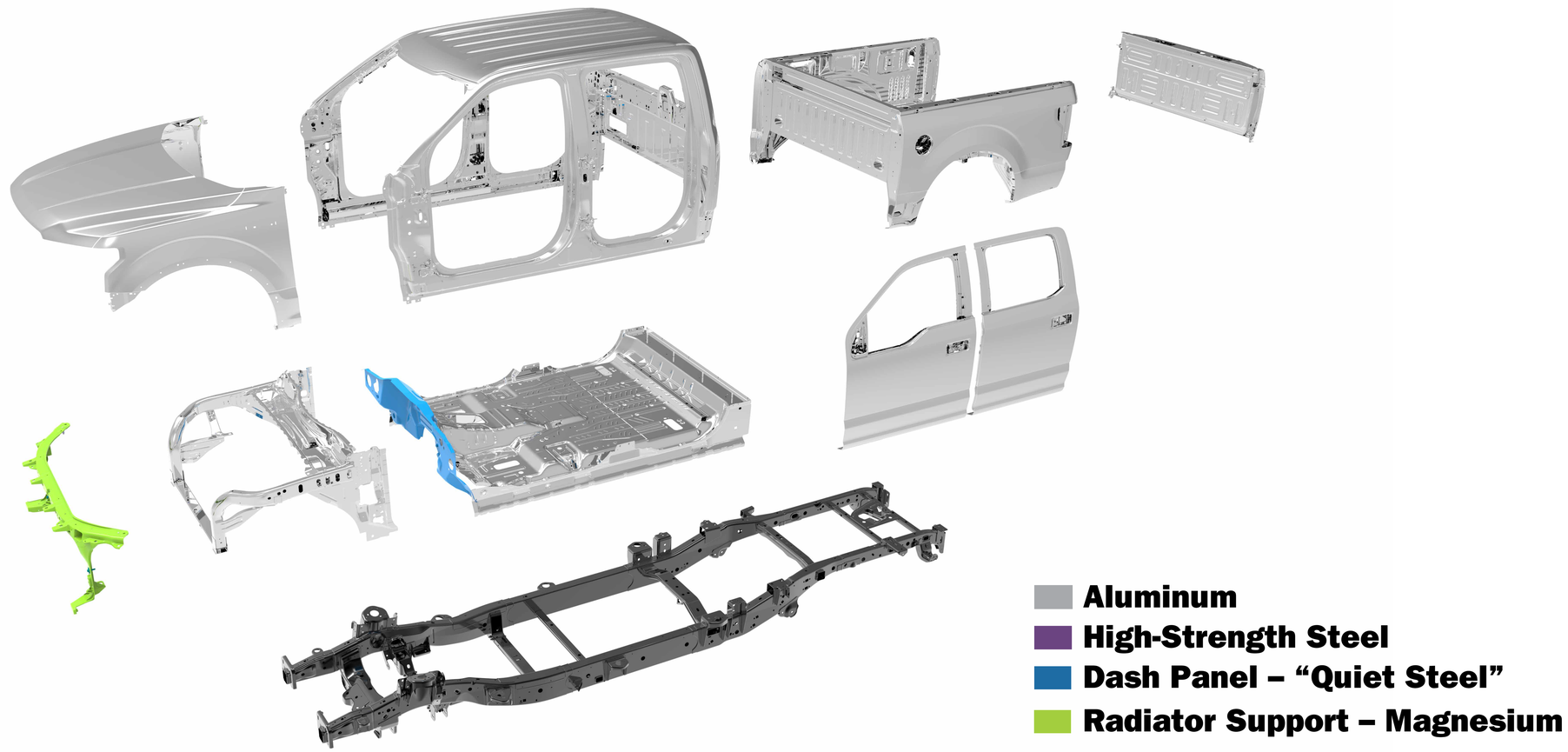
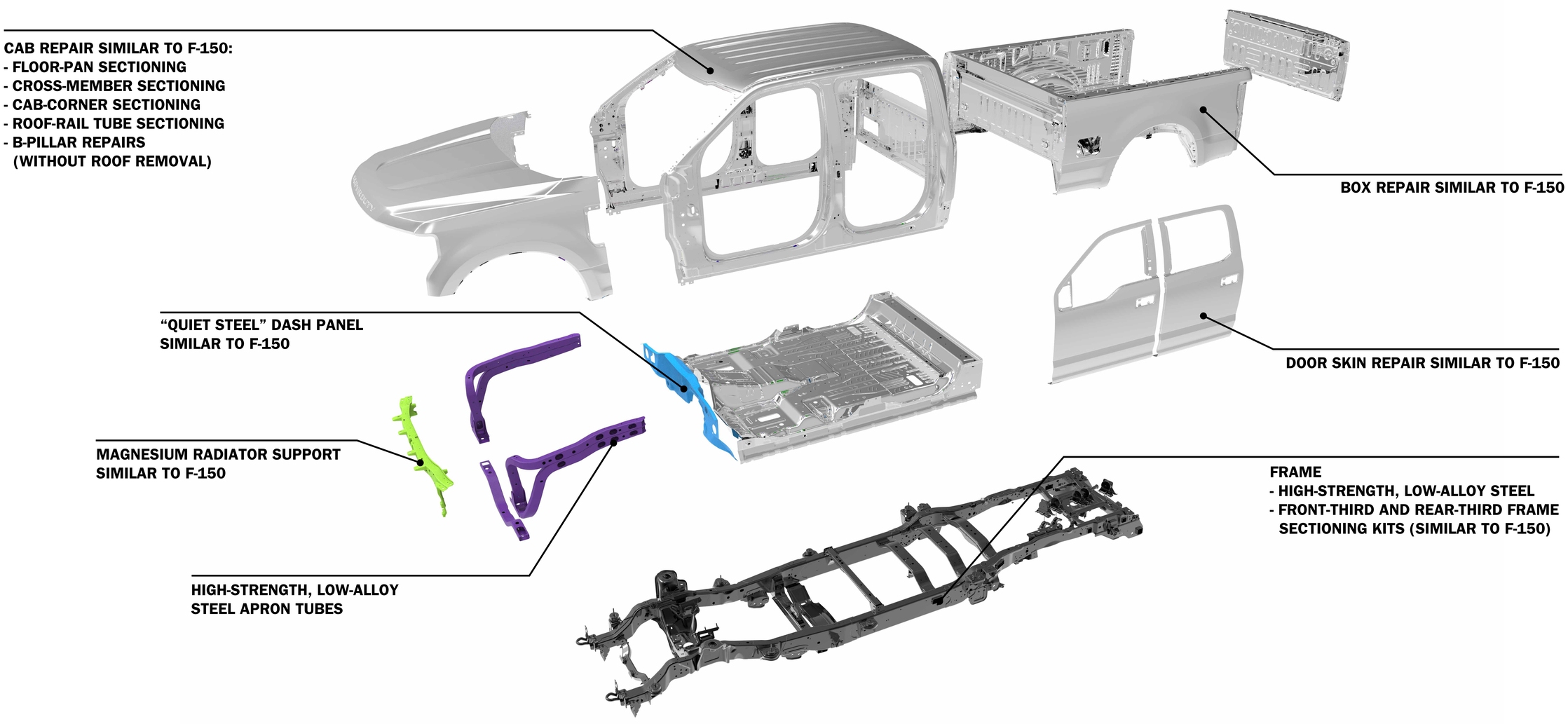
2017 FORD SUPER DUTY