Eliminating the Limitations of Traditional Insulation: Protection of Stainless Steel and Hygiene

In high care pharmaceutical and cleanroom spaces, insulation is more than just temperature control; insulation is central to protecting the integrity of the process itself. It's also true that traditional insulation comes with a range of hidden compromises to equipment and compliance.



Certain types of insulation could have leachable chlorides and when in contact with water they can create a series of issues. Moisture from sealed insulation can allow chlorides to pool on surfaces of stainless steel and expose them to pitting corrosion, and ultimately the failure of the equipment over time. Water ingress can also compromise insulation performance and create conditions where microbiological contamination can develop risks that no regulated environment can afford.

The T-FIT® insulation system design addresses the above issues. T-FIT is a closed-cell foam insulation that is high performance, with no leachable chlorides, and water resistant. Not allowing moisture to ingress, protects the steel from corrosion and prevents risk of contamination. T-FIT insulation meets the highest requirements of hygiene compliance and continues to provide long term thermal effectiveness, while preserving stainless steel systems.

By removing the weaknesses of conventional insulation, T-FIT provides peace of mind that you are protecting your processes and are compliant in your facility.



T-FIT® insulation can achieve these performances is due to the unique 3 stage manufacturing process of the foam.

The foam is subsequently pre-fabricated into standard sizes which allows easy and quick installations on site. The insulation can also be reuse after it is taken out for maintenance.

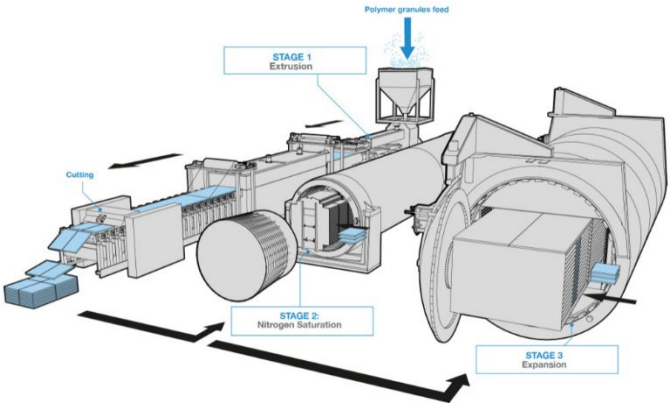



Fungal growth testing ASTM G21-15 method

1. Sample is coated with an agar to promote growth
2. Fugal spores are then placed onto the agar prepared surface
3. Sample is placed in an oven at 28°c to 30°c/85°f at RH>85% for 28 days
4. After 28 days samples are removed from oven and surface checked for growth
5. ZOTEK® F foams used to produce T-FIT Clean and T-FIT® Process showed zero growth





Tables of Comparison

#	Property	T-Fit® Clean	EPDM Based Elastomeric
1	**Construction**	Closed cell, will not absorb moisture	Closed cell, will not absorb moisture
2	**Shredding of loose particles**	None due to nature of PVDF foams	Very little due to nature of rubber foams
3	**VOC Emissions**	8.86 ppm following testing 3hrs@22c, 3hr@90c	No test data found.
4	**Resistance to fungal attack**	None after 28 days testing	No test data found.
5	**Thermal Conductivity**	0.043W/mK @80°c mean temperature	0.047W/mK at 50°c, 0.057W/mK at 100°c
6	**Installation**	Due to installed tape, very fast, no PPE required	Requires use of adhesives and/or tape for installation
7	**Upper Service temperature**	160°c peak, 140°c continuous	125°c to EN14706/7, a 72 hour test
8	**Gauge/thickness of product**	Produced at 6.35mm	generally 13mm min
9	**UV resistance**	Natural property of PVDF foams, resistant through entire gauge	UV resistant
10	**Flexibility**	Product is flexible, easy to install, performance not impacted by vibration	Flexible product
11	**Speed of application**	Very fast, supplied with fittings	Time required to fabricate fittings from straights
12	**Reaction to fire**	EN 13501-1 B S1 D0	EN 13501-1 D S3 D0
13	**Compression/recovery**	Crosslinked structure generally prevents permanent deformation	Material deforms under minimal load and can cause permanent deformation

#	Property	T-Fit® Clean	Nitrile Based Elastomeric
1	**Construction**	Closed cell, will not absorb moisture	Closed cell, will not absorb moisture
2	**Shredding of loose particles**	None due to nature of PVDF foams	Very little due to nature of rubber foams
3	**VOC Emissions**	8.86 ppm following testing 3hrs@22c, 3hr@90c	No test data found.
4	**Resistance to fungal attack**	None after 28 days testing	No test data found.
5	**Thermal Conductivity**	0.043W/mK @80°c mean temperature	0.033 W/mK at 0°c, no other data found
6	**Installation**	Due to installed tape, very fast, no PPE required	Requires use of adhesives and/or tape for installation
7	**Upper Service temperature**	160°c peak, 140°c continuous	110°c to EN14706/7, a 72 hour test
8	**Gauge/thickness of product**	Produced at 6.35mm	generally 13mm min
9	**UV resistance**	Natural property of PVDF foams, resistant through entire gauge	No, requires paint/cladding etc
10	**Flexibility**	Product is flexible, easy to install, performance not impacted by vibration	Flexible product
11	**Speed of application**	Very fast, supplied with fittings	Time required to fabricate fittings from straights
12	**Reaction to fire**	EN 13501-1 B S1 D0	EN 13501-1 B S3 D0
13	**Compression/recovery**	Crosslinked structure generally prevents permanent deformation	Material deforms under minimal load and can cause permanent deformation

For more test information outgassing, particulates, fire resistance, thermal conductivity, please contact patrick@REPASSA.com