CONTINUOUS BUFFER MANAGEMENT SYSTEM:

Large-Scale Buffer Preparation

By Zuwei Jin, PhD

Although traditional tank farm systems have long been the cornerstone of buffer preparation, they face challenges that have grown with the expansion of processing scale in the industry [1–4]. This article explores the concept of the continuous buffer management system (CBMS) as an alternative to traditional buffer tank farm methods. We analyze the historical progression of buffer preparation, highlight the advantages and challenges of the CBMS, and present an overview of its hardware components, system design, and process control strategies to demonstrate the viability of the CBMS as a robust and cost-effective solution for biopharmaceutical buffer management at production scale.

In the realm of biopharmaceutical downstream processing, the continuous pursuit of technological advancements has given rise to innovative approaches that redefine conventional practices. One such transformative development could be the CBMS, a revolutionary departure from traditional tank farm methods. We explore the multifaceted landscape of the CBMS, shedding light on its inception, evolution, and transformative impact within the biopharmaceutical industry.

Recognizing the limitations of these conventional methods, the introduction of inline dilution skid technology marked a significant leap toward more streamlined and efficient buffer management [2]. However, it was the CBMS that truly set the stage for a possible paradigm shift in how buffers are prepared and used in the biopharmaceutical industry. A CBMS is essentially a dynamic form of a buffer tank farm. Instead of using large hold vessels, it uses much smaller vessels called relay tanks (usually less than one-tenth the size of the hold vessels). These are filled by an inline mixing/dilution-based skid, enabling many economic and operational benefits [5].

This article aims to illuminate the path that led to the emergence of a CBMS as a possible disruptive force in the field. By going back to its historical development, we trace the evolution of buffer preparation technology. Our exploration will unveil the economic and operational benefits that a CBMS offers, providing valuable insights into how this novel approach has the potential to revolutionize buffer preparation support in the processing industry.

THE EVOLUTION OF BUFFER PREPARATION TECHNOLOGY

The evolution of buffer preparation technology within the biopharmaceutical industry has been a dynamic journey, marked by significant transitions from traditional methods to more innovative approaches. There are three main technologies related to this journey, as shown in Figure 1.

Traditional Buffer Tank Farm

In the early stages of biopharmaceutical manufacturing, the prevailing method for buffer preparation was the traditional tank farm system. These systems resembled chemistry laboratories with large-scale vessels akin to oversized beakers and flasks. Buffers were premade and stored in substantial vessels, each designed to accommodate the specific process it supported.

Following each use, these vessels underwent rigorous cleaning-in-place (CIP) and sterilization-in-place (SIP) procedures to ensure product integrity. Although this method serves its purpose, it becomes more challenging to operate as the scale of vessels expands, with some processes requiring vessels as large

Figure 1: Historical perspectives on buffer preparation technology.

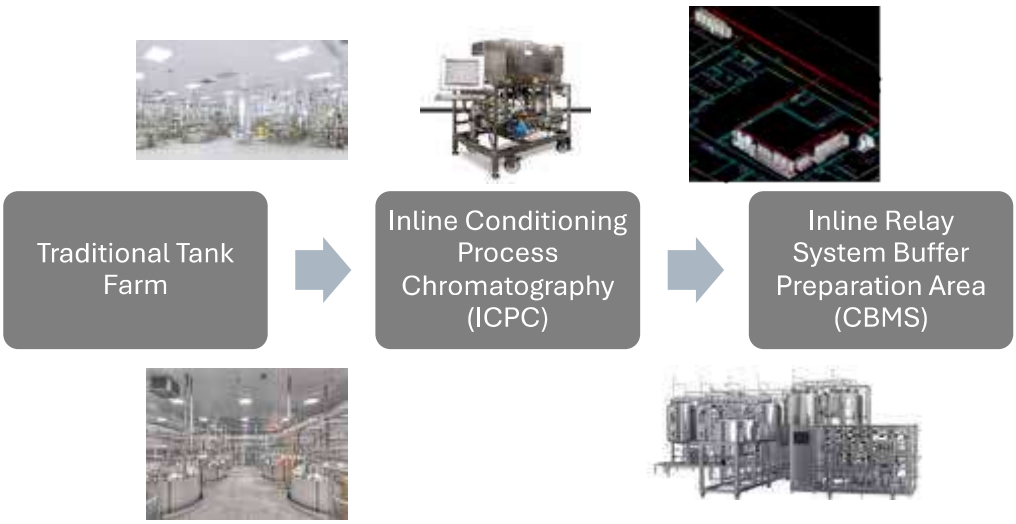

Figure 2: A typical CBMS before delivery.



as 20,000–30,000 liters to support commercial production of chromatography processes [2, 3].

Introduction of Inline Dilution Skids

Approximately 20 years ago, the industry saw a significant shift with the introduction of inline dilution skid technology. This innovative approach aimed to address the limitations of traditional tank farm systems by facilitating the inline mixing of concentrated buffer solutions with a significant volume of water for injection (WFI) at the point of use [3].

This method marked a departure from the large vessels used in traditional buffer tank farms, replacing them with smaller, more efficient systems. Inline dilution skids allowed for the combination of specific processes with the associated buffer preparation, commonly referred to as inline conditioning process chromatography (ICPC). This marked a notable improvement in efficiency and a reduction in the physical footprint required for buffer preparation, which led to tremendous cost saving [3].

Emergence of the CBMS

The culmination of the evolution of buffer preparation technology has led to the development of the CBMS, as shown in Figure 2. Unlike the preceding inline dilution skids, the CBMS represents a more profound departure from the traditional buffer tank farm concept [5]. Rather than integrating buffer preparation with specific processes, the CBMS uses inline mixing technology to prepare buffers for an entire buffer preparation area.

This is achieved through a series of small vessels known as relay tanks, which can be likened to the shift of playing videos from DVDs to network streaming. In this analogy, traditional tank farms are akin to playing videos from DVDs, while the CBMS operates like a video streaming service. The relay tanks, managed by an inline mixing system, ensure that each vessel remains consistently filled for use. By emulating the functionality of the larger vessels in traditional buffer tank farms, the CBMS allows seamless integration of itself into existing downstream processes. A more in-depth exploration of the benefits and technical aspects of the CBMS as a

Figure 3: Functional modules in a CBMS.

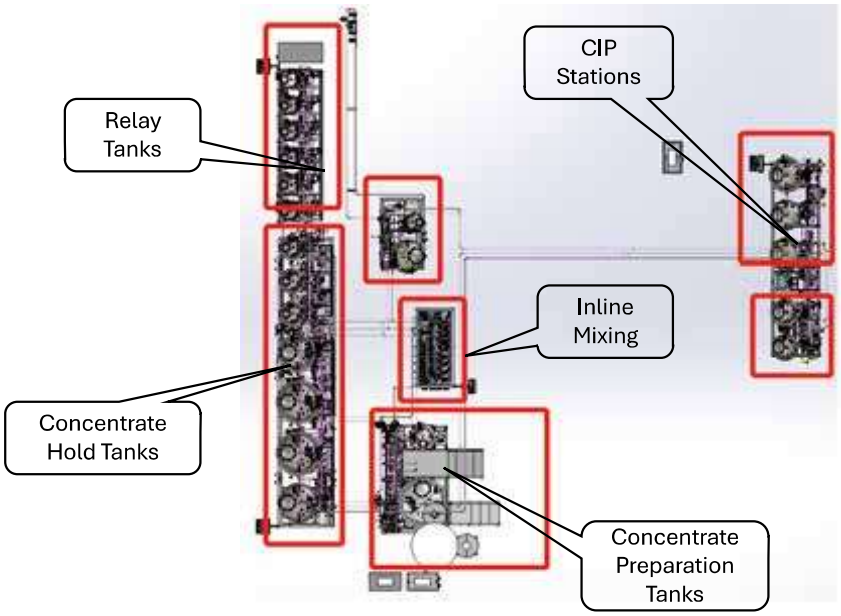

possible transformative solution in biopharmaceutical downstream processing is provided next.

BENEFITS OF THE CBMS

The adoption of the CBMS represents a significant leap forward in biopharmaceutical downstream processing. In this section, we delve into the benefits offered by the CBMS, emphasizing its economic, operational, and potential regulatory advantages over traditional buffer tank farm systems.

Capital Savings

One of the foremost advantages of a CBMS is its potential to revolutionize the economics of buffer preparation in the biopharmaceutical industry. By transitioning from large traditional buffer tank farms to a more compact and efficient CBMS, substantial cost savings can be achieved [1–4, 6] The significantly reduced vessel sizes contribute to a dramatic decrease in capital investment. It is reasonable to expect savings of up to 60% in capital expenditure simply based on the reduction of current GMP (cGMP) space required for the vessels when compared to the traditional buffer tank farm setup [6]. This is a remarkable shift in cost dynamics, allowing biopharmaceutical companies to allocate resources more efficiently.

Operational Savings

Beyond capital savings, a CBMS enhances the operational efficiency of buffer preparation. The smaller vessels, combined with precise inline mixing and control strategies, lead to a considerable reduction in operating costs. The power consumption, reagent usage, and chemical consumption related to CIP and SIP processes are all significantly diminished due to the smaller vessel sizes, resulting in substantial long-term cost savings in the range of 20% to 50% [2, 6, 7].

Enhanced Batch Documentation

A CBMS leverages automation to streamline and minimize manual operations associated with traditional buffer preparation methods. The adoption of a distributed control system (DCS) platform provides better data logging and data integrity, resulting in improved batch documentation. The precise control and real-time monitoring capabilities offered by the CBMS ensure that data related to buffer preparation is more accurate and easily accessible.

Expansion Versatility

Whether for greenfield projects or the expansion of existing cGMP facilities, a CBMS's small footprint proves an indispensable option for buffer preparation. The CBMS emerges as a versatile and economically advantageous alternative to traditional buffer tank farm systems. Its impact extends beyond cost savings to encompass enhanced operational efficiency, improved batch documentation, and regulatory compliance.

TECHNICAL CHALLENGES OF BUILDING THE CBMS

The development of a CBMS is a relatively complex endeavor that presents several technical challenges especially for the skid manufacturers of many original equipment manufacturers (OEMs). This section outlines these challenges and their intricacies.

Figure 4: Complexity of system design for a CBMS.

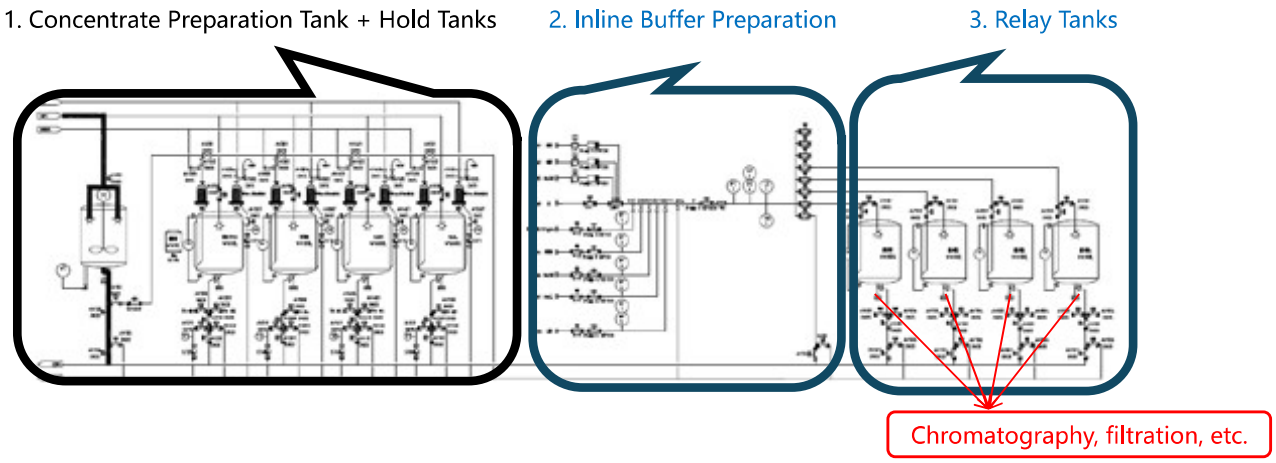

System Design

CBMS design encompasses multiple modules, including inline mixing, relay tanks, concentrate hold tanks, and in/out valve matrixes—not to mention devices/IO (input/output) from different vendors, which involves compatibility and integration challenges (see Figure 3). Depending on how concentrates are provided, concentrate prep tanks and CIP stations could also be part of a CBMS. Unlike standard skid-based systems, the CBMS's scale and intricacy make it an overwhelming undertaking for most OEM manufacturers. The management of pumps, valves, flow meters, analytical instruments, pipes, and connectors must also meet stringent hygienic standards such as the American Society of Mechanical Engineers (ASME) standard for Bioprocessing Equipment (BPE) to maintain product integrity and safety [8].

Flow Rate Control

A critical challenge in CBMS development is the precise control of flow rates of each mixing stream in the CBMS. Flow rate accuracy is a pivotal factor in determining the specifications of buffer solutions. Achieving this level of precision in flow rate control necessitates advanced hardware design expertise, fluid dynamics know-how, and an understanding of hygienic principles. In addition to flow control precision at its stabilized state, the flow control loops need to perform in a way that is free from pressure and flow disturbance in the system, which is paramount for practical application of CBMS.

Process Control

Unlike simpler skid-based systems, CBMS involves managing various units and modules, which requires coordination and communication. Each unit in the system must harmoniously interact with others and downstream process units to ensure smooth operation and inter-operations. The complexity arises from the need to manage numerous variables as well as multiple layers of functionality across these units. A more powerful control platform such as a DCS with batch management functionality would be required for a CBMS and innovative control strategies are keys to making a CBMS a practical solution.

Alignment with Plant Layout

The ability to tailor the system to the physical constraints and requirements of a given facility is a crucial aspect of CBMS implementation. Many OEMs lack the engineering capability to adapt such a solution to specific layout of individual plants.

Process Configuration

The CBMS's innovative use of relay tanks and the control strategies that enable efficient buffer filling are pivotal to its success. However, these key process concepts were not available until recently. The idea of using relay tanks to decouple buffer preparation from specific processes and the control strategies that ensure reliable buffer filling in multiple relay tanks are a paradigm shift in inline mixing buffer preparation.

The technical challenges associated with building a CBMS are multifaceted and include system complexity, flow rate control, hardware design, process control strategies, plant layout alignment, and the necessity of novel process concepts. Overcoming these challenges has been instrumental in making the CBMS a practical and robust solution.

COMPLEXITY OF SYSTEM AND HARDWARE

The hardware design of the CBMS plays a pivotal role in ensuring the system's effectiveness and reliability [3]. Additional intricate details of the CBMS hardware are discussed in this section.

Figure 5: CBMS running as a service through a S88 batch recipe.

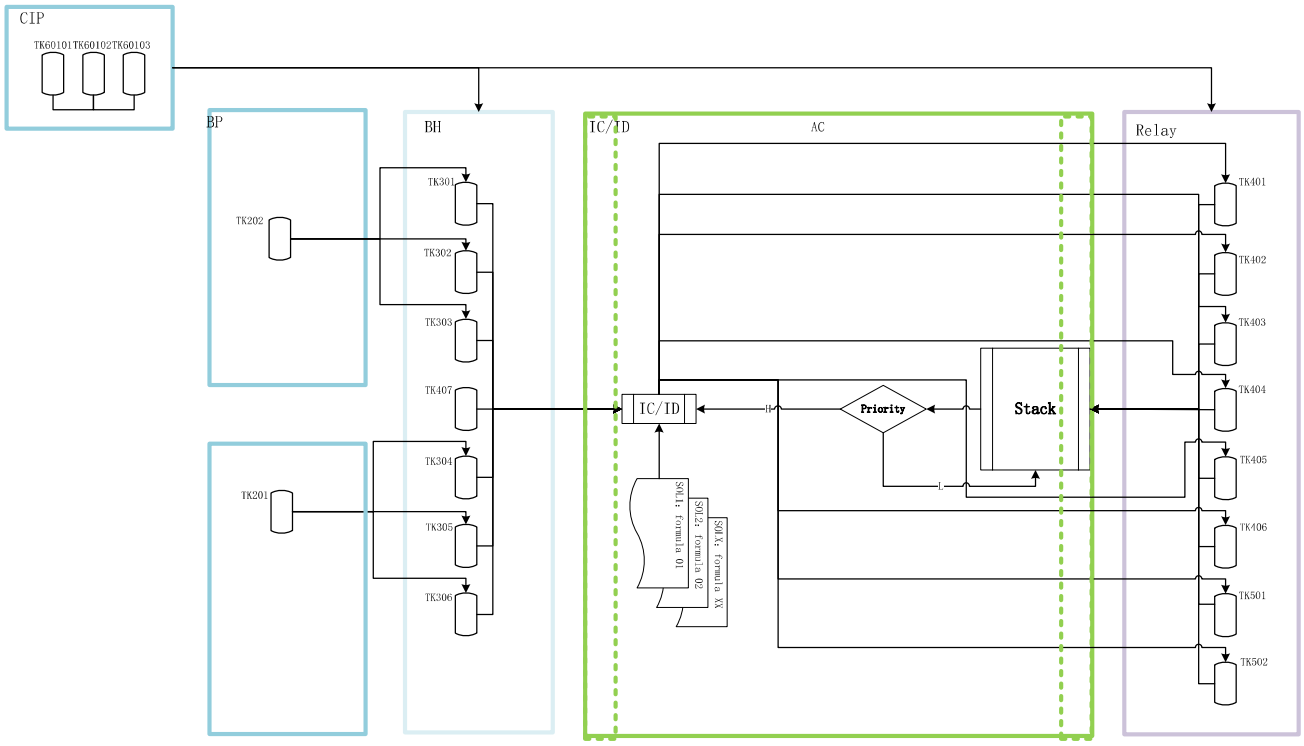

Inline Mixing Module

The core of the CBMS's hardware design is the inline mixing module (see Figure 4). This module leverages advanced technology to blend concentrated buffer components with WFI to create ready-to-use buffer solutions. Ensuring accurate and reliable flow rates is essential for achieving the desired specifications of buffer solutions. Flow control loops—involving a series of diaphragm or rotary lobe pumps, high accuracy mass flow meters, and control devices—are intricately designed to maintain precise flow rates under dynamic conditions.

Inline monitoring instruments such as pH and conductivity meters are usually mandatory to ensure the buffer stays within the specification in real time. Out-of-specification buffer will be diverted to waste immediately and a warning will be issued by the CBMS. Besides inline monitoring, buffer-making performance in inline mixing is usually prevalidated based on the flow rate of each mixing stream for making the buffer. Unlike traditional buffer preparation, tracking of buffer made from the CBMS is based on multiple high-performance mass flowmeters and inline pH and conductivity monitoring.

Concentrate Tanks

The CBMS hardware configuration includes an array of concentrate tanks, each containing different buffer components. These components may encompass 4 moles and 3 moles phosphoric acid, 2 moles citric acid, 2 moles acetic acid, 4 moles sodium chloride, and sodium hydroxide, among others. These tanks hold the concentrated solutions required for buffer preparation. Although single-use bags can be used as concentrate tanks in the CBMS, the tanks are sometimes made of higher alloy materials such as 904L or Hastelloy to accommodate the harsh chemicals.

Relay Tanks

A series of relay tanks play a central role in connecting the CBMS with the downstream process operations. These relay tanks are designed to continuously accommodate various buffer solutions required for the downstream operation the CBMS is supporting. These solutions include wash solutions, regeneration solutions, elution solutions, storage solutions, CIP solutions, and equilibration solutions in a typical chromatography operation. The relay tanks serve as a dynamic reservoir for buffer solutions, ensuring a sustained supply to the downstream processes that the CBMS is set up to support. Relay tanks can be single-use bags as well as stainless steel vessels.

Valve Matrix

The CBMS incorporates a complex valve matrix responsible for managing the flow paths of concentrates and buffer solutions. This intricate network of inlet and outlet valves, involving up to 100 different valves, enables the distribution of buffer solutions

The system and hardware design of the CBMS are engineered to facilitate the precise preparation, distribution, and control of buffer solutions.

to the appropriate relay tanks and downstream processes. Precise and reliable control of these valves is essential to maintaining the integrity of the CBMS and ensuring the buffers reach their intended destinations.

The system and hardware design of the CBMS are engineered to facilitate the precise preparation, distribution, and control of buffer solutions. These elements work in concert to ensure the system's efficiency, maintain the integrity of buffer solutions, and support the overall objectives of biopharmaceutical downstream processing.

KEY PROCESS CONTROL STRATEGY

The success of the CBMS hinges on its robust control platform and well-developed control strategy. In this section, we discuss the intricacies of the CBMS's control strategies and the software platform that underpins its operation.

Software Platform

The CBMS control usually relies on more sophisticated DCSs, which allows oversight of its large number of components through various IOs and many units while also implementing recipe-driven procedural control across multiple units. Ideally, the CBMS control is integrated with the plant downstream DCS through a compact DCS controller, which can be standalone or seamlessly incorporated into a plant's existing DCS.

Process Control Strategies

Given the CBMS's extensive scope, process control strategies are essential for maintaining the synchrony of various units and modules within the CBMS and coordination with downstream processing operations. Besides the equipment-based control for flow rate, tank level, and valve position, batch-level control of functionality must be part of the strategy.

The inter-unit communication between inline-buffer preparation and downstream processing has always been a major practical challenge in plant operation. In many cases, the batch recipe must be so process-specific and complicated that a lot of customization has to be made. The CBMS has, however, basically eliminated this complexity and standardized the batch recipe. This was accomplished by implementing an innovative buffer-filling strategy, which allows a relatively independent boundary of the CBMS in relation to downstream processing [5].

Unit Definition and Standardization

To further reduce the CBMS's inter-unit communication complexity, another critical step is the redefinition and standardization of equipment units within the system [5]. This involves defining units in terms of physical components and also redefining them in the context of batch management, following the S88 standard (shown in Figure 5). By adopting an innovative buffer-filling strategy and standardizing the units within the CBMS, the CBMS can be built as a robust and manageable OEM product.

Batch Recipe

The CBMS leverages batch operation management to set up and oversee buffer preparation. The system runs as a service through a S88 recipe that sets up the buffer-filling service for the relay tanks. Parameters such as buffer ID, flow rate, and total buffer quantities are configured at the beginning of each batch, ensuring that the correct buffer is supplied to the appropriate relay tanks. There is no direct communication required between the CBMS and downstream processing except warnings and alarms.

The CBMS's control platform and strategies are fundamental to its success as a comprehensive buffer management solution. The DCS platform provides the necessary industrial control infrastructure, whereas unit standardization and buffer-filling strategies ensure effective coordination between the CBMS and downstream processing. These elements empower the CBMS to deliver consistent and reliable buffer preparation to the downstream operations it supports as if the CBMS were the traditional buffer tank farm.

TECHNICAL DETAIL OF BUFFER FILLING

As discussed previously, one of the pivotal aspects of the CBMS is its buffer-filling strategy. The CBMS does not need to directly communicate with downstream processing. The CBMS manages to fill the right buffer for the right tank at the right time by responding to tank liquid level and buffer priority. This development significantly simplified the batch-level control logic between the CBMS and downstream processing. In this section, we shed more light on its key concepts and principles.

Liquid-Level-Based Filling

The CBMS employs a liquid-level-based strategy to govern the filling of relay tanks [5]. Each relay tank is assigned with different liquid levels that correspond to specific flow rates for buffer filling. These liquid levels trigger the system to initiate, stop, or alarm the filling process.

Flow Rate Adjustment

Flow rate control is a critical factor in the CBMS's buffer-filling strategy. The precise control of flow rates is pivotal in achieving the desired specifications for buffer solutions. The buffer-filling process responds to various liquid levels within relay tanks by adjusting flow rates accordingly, providing a safeguard against overfilling or depletion [5]. Such flow rate adjustment is essential for maintaining the effectiveness of multiple buffer filling throughout the preparation and distribution process.

Figure 6: CBMS buffer preparation performance example.

Formula 1 (25 mM Citric Acid, 0.05 M NaCl, pH 5.8±0.1, Conductivity 10±1)

Flow Rate	Target pH	Actual pH	Target Conductivity (mS/cm)	Actual Conductivity (mS/cm)
200 L/H	pH 5.8±0.1	Average pH: 5.76 Highest pH: 5.77 Lowest pH: 5.76	Conductivity: 10±1	Average: 9.881 Highest: 9.981 Lowest: 9.677

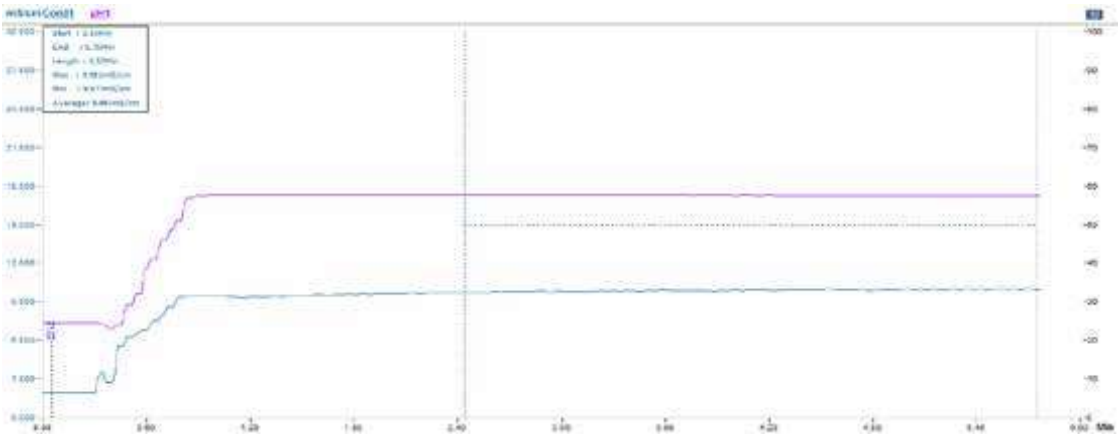

Formula 2 (20 mM PB, 0.54 M NaCl, pH 7.9±0.1, Conductivity 45±1)

Flow Rate	Target pH	Actual pH	Target Conductivity (mS/cm)	Actual Conductivity (mS/cm)
100 L/H	pH 7.9 ± 0.1	Average pH: 7.9 Highest pH: 7.95 Lowest pH: 7.87	Conductivity: 45 ± 1	Average: 44.977 Highest: 45.053 Lowest: 44.910

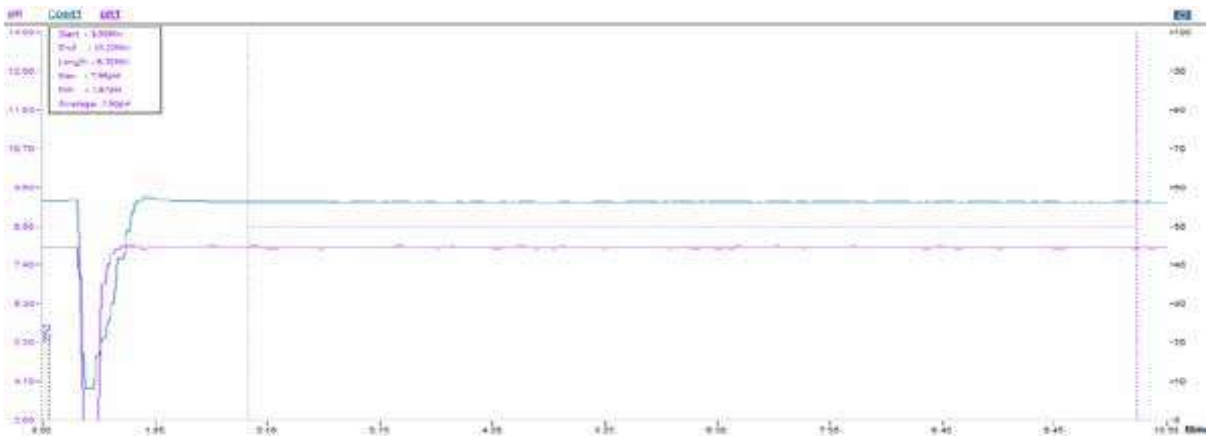

Buffer Switching and Priority

Buffer-filling strategy addresses scenarios where multiple requests for buffer solutions may arise simultaneously [5]. To manage these situations, the CBMS incorporates switching and priority logic that ensures that buffer-filling requests are handled in an organized and prioritized manner. When two or more requests are made, a base logic for arbitration determines the sequence in which buffer filling should occur, preventing bottlenecks and optimizing system performance.

Cleaning Between Buffer Switches

A sufficient hot WFI wash is performed in the inline mixing module for a short period of time immediately after switching the buffer. The cleanability is usually prevalidated. As the buffers made by the same mixing module belong to the same chemistry group, a rigorous cleaning involving surfactant, base, and acid are not required. In cases where a different group of buffers with different chemical natures are present, multiple inline mixing modules will have to be implemented.

The CBMS's buffer filling leverages tank liquid-level-based control, flow rate adjustment, and logical arbitration to maintain a steady and controlled supply of buffer solutions to relay tanks. This strategy underpins the efficient and reliable operation of the system, safeguarding the integrity of buffer solutions and ensuring they are readily available for downstream processes.

IMPLEMENTATION

The successful implementation of the CBMS across multiple projects has yielded substantial outcomes and benefits. In this section, we present an overview of the results achieved in practical applications of the CBMS in the biopharmaceutical industry.

Project Scope and Versatility

The CBMS has been effectively implemented in approximately 20 distinct production lines, serving a diverse range of clients in the biopharmaceutical industry. These projects encompassed various scales, involving both single-use bags and stainless steel tanks and accommodating the requirements of different processes and facilities. The adaptability of the CBMS to a multitude of projects underscores its versatility and broad applicability.

Buffer-Making Performance

In comparison to traditional ICPC systems, the CBMS offers enhanced performance. It mitigates pressure disturbances and chromatogram artifacts during buffer switches. End users find that the buffer solutions delivered by the CBMS are equivalent to those obtained from traditional tank farm vessels, and the CBMS was able to maintain product quality and consistency during operation (see Figure 6).

GAMP® Execution and Validation

GAMP project execution is usually required for delivering CBMS product to meet the stringent validation requirements of cGMP. GAMP execution ensures the functionality, compliance, reliability, and safety of the CBMS in regulated biopharmaceutical environments. By making the CBMS an OEM product through standardization on system design and process control strategy, validation support has been significantly simplified and product delivery lead time can be greatly improved.

On the other side, engineering systems similar to the CBMS would require a yearslong, lengthy custom engineering or automation project to implement. A CBMS as an OEM product represents a new option for pharmaceutical end users in a new plant design or an expansion project for an existing facility.

Plant Layout Alignment

Another important aspect of the CBMS's implementation is its adaptability to a variety of plant layouts. The capability of the OEM vendor to align the system with the specific spatial constraints and requirements of each client's facility is essential for CBMS implementation. This capability enables the CBMS to seamlessly integrate into diverse production environments.

Economic and Operational Benefits

Although exact numbers are still unavailable, the implementation of the CBMS has consistently yielded economic advantages for end users. The savings were considered tremendous [3]. Substantial reductions in capital investment expect to be in the range of 30% to 60% in comparison to traditional buffer tank farm systems [6]. Operating costs have been reduced due to the use of smaller vessels and smaller CIP processes [2]. General consensus on the savings seems to be in the range of 20% to 50% [3]. These economic advantages make the CBMS an attractive option for both greenfield projects and the expansion of existing facilities.

The implementation of CBMS has showcased its adaptability and seamless alignment with different plant layouts. It has delivered substantial economic benefits, automated manual operations, improved batch documentation, and added data integrity and accessibility. These outcomes underscore CBMS's viability as a robust solution for buffer management in the biopharmaceutical industry.

CONCLUSION

The CBMS stands as a transformative solution that offers effective buffer preparation in the biopharmaceutical industry. This comprehensive discussion highlights the system's innovative approach, its proven benefits, and ways around the technical challenges in its development and implementation.

The CBMS has evolved as a dynamic response to the conventional buffer tank farm approach. It adopts inline mixing technology and a series of relay tanks to offer the capacity to prepare buffers for an entire buffer preparation area. The CBMS decouples downstream processing and buffer preparation, resulting in smaller vessels and a substantially reduced cGMP footprint. This shift empowers the CBMS to deliver substantial savings in capital investment and operating costs for greenfield projects and the expansion of existing cGMP facilities.

The success of CBMS implementation is attributed to its standardized system design, process control strategy, and GAMP project execution. These elements enable the CBMS to operate seamlessly, delivering consistent and high-quality buffer solutions to downstream processing.

The CBMS's economic benefits, improved batch documentation, and enhanced performance have been demonstrated in various client projects, providing a compelling economic incentive for its adoption. The shift of CBMS toward a more automated and data-centric approach is also aligned with digital transformation and Industry 4.0 effort in the pharmaceutical industry.

The CBMS represents a leap forward in buffer preparation technology. It is poised to become an essential element in the quest for ongoing bioprocess intensification and operational excellence in the biopharmaceutical industry. Thus, it invites further exploration and consideration as the industry continues to evolve.

References

1. National Institute for Innovation in Manufacturing Biopharmaceuticals-BioPhorum. "Buffer Stock Blending System: A More Advanced Concept for Buffer Manufacturing." BioPhorum. 29 November 2019. www.biophorum.com
2. Daniel, L. E., and A. J. Vermunt. "Inline Dilution: An Agile Capability for Downstream Manufacturing." *Pharmaceutical Engineering* 39, no. 3 (May/June 2019):64–70. https://ispe.org/pharmaceutical-engineering/may-june-2019/inline-dilution-agile-capability-downstream-manufacturing
3. Matthews, T. "An Integrated Approach to Buffer Dilution and Storage." PharmaManufacturing. 1 April 2009. www.pharmamanufacturing.com/production/unit-operations/article/11361617/pharmaceutical-buffer-an-integrated-approach-to-buffer-dilution-and-storage-pharmaceutical-manufacturing
4. Ram, N., J. Johnson, H. Ardeshna, J. Camire, R. Campbell, D. Chau, et al. "Evaluation of the Design, Development, and Performance of a Mass-Flow Based, Open-Source Buffer Manufacturing System." *PDA Journal of Pharmaceutical Science and Technology* 77, no. 2 (2023):79–98. doi:10.5731/pdajpst.2021.012660
5. Zhou, S., Z. Jin, H. Xu, and Y. Sun. "A Fully Automated Buffer Management System Using a Series of Relay Tanks." Chinese Patent CN116139755 A. Beijing, China. Chinese Patent Office.
6. Fabbrini, D., C. Simonini, J. Lundkvist, E. Carredano, and D. Otero. "Addressing the Challenge of Complex Buffer Management: An In-Line Conditioning Collaboration." BioProcess International. 13 December 2017. https://bioprocessintl.com/downstream-processing/separation-purification/addressing-the-challenge-of-complex-buffer-management-an-in-line-conditioning-collaboration/
7. Mirasol, F. "Using Automated Inline Dilution to Ease Bottlenecking." *BioPharm International* 33, no. 12 (2020):36–37.
8. The American Society of Mechanical Engineers. Bioprocessing Equipment. 2022. www.asme.org/codes-standards/find-codes-standards/bpe-bioprocessing-equipment-(1)

About the author

Zuwei Jin, PhD, is a Principal Consultant at Lisure Science. Zuwei has more than 25 years of experience in the life sciences industry. He was an industry consultant for the life sciences industry in Cognizant Technology Solutions (formerly Zenith Technologies) specializing in manufacturing execution systems (MES) and process automation systems (PAS). Prior to that role, he was an industry consultant for the life sciences industry with Emerson Automation Solution for six years, specializing in MES, process analytics, and advanced process control (APC). He also has 16 years with GE Healthcare Life Sciences (Cytiva) in different roles, from operation to engineering to product marketing. He has been involved in many engineering projects in the global life sciences industry and is well versed with best practices in the industry. He has a PhD in chemical engineering from Ohio State University. Zuwei joined ISPE in 2013.

Submit an article on Sustainability to PE Magazine.

PE Magazine is looking for submissions focused on sustainability and that cover various aspects across the product life cycle. Example topics include:

- Energy and carbon reduction
- Waste reduction and packaging reduction
- Process efficiency
- Water usage and impacts
- Facility design and life cycle

Sustainability is the editorial theme for the November/December 2024 issue of PE magazine. Deadline for submission is 5 July 2024.

For more information, visit ispe.org/pharmaceutical-engineering/about/submit-article.
For any questions, email pemag@ispe.org.