POWER CONDENSER ASSEMBLIES

HEAVY DUTY CONDENSERS

© 2026 Omega Heavy Duty

420-860-977

HEAVY DUTY



The 420-860-977 unit is a high output condenser with copper/aluminum coil and two 9" power fans in a 12GA steel shroud.

420-860-977-12.....12VDC

420-860-977.....24VDC

SPECIFICATIONS

Size/Dimension.....31.3" L x 10.5" W x 7.6" H

BTU/Capacity.....33,500 BTU/hr

Weight .....45 lbs

Condenser Coil.....Copper Tubing Aluminum Fin

Airflow.....1090 CFM

Current Draw .....12 amps @ 12VDC
6 amps @ 24VDC

Fan.....9" Condenser Fans

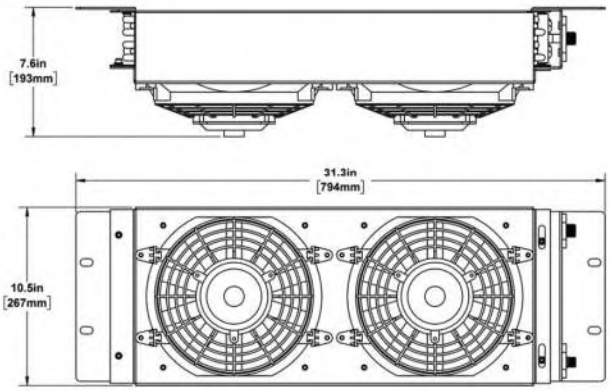

IMACA CONDITIONS

Capacity shown at IMACA conditions: 100°F (38°C)
Ambient-Condenser/ 90°F (32°C) DB & 75°F (24°C)
WB / 50% RH and condensing temperature of 135°F (57°C)

SERVICE PARTS	PART NO.
Condenser Coil	420-860-977-1
Condenser Fan - 9", 12VDC Puller	3500
Condenser Fan - 9", 24VDC Puller	430-008
Condenser Fan Mount Feet	3578
#6 Fitting Securing Lug	440-090
#8 Fitting Securing Lug	440-091

OPTIONS

- 3/16" Shroud
- "L" Bracket to hang off back of roof

Having trouble finding the right part for your application? We can help!

If you don't find what you are looking for, reach out and our team will custom build exactly the system you need. Contact Omega HD at sales@omegahd.com.

© 2026 Omega Heavy Duty

HA-100

HEAVY DUTY

The HA-100 is a heavy duty unit featuring a copper/aluminum coil with 1/4" reinforced base plate and 3/16" heavy gauge shell. This condenser is ideal for the roughest environments



HA-100-12-HD-R.....12VDC Right Hand
HA-100-12-HD-L.....12VDC Left Hand
HA-100-24-HD-R.....24VDC Right Hand
HA-100-24-HD-L.....24VDC Left Hand
HA-100-12-HD-VERT.....12VDC Vertical
HA-100-24-HD-VERT.....24VDC Vertical

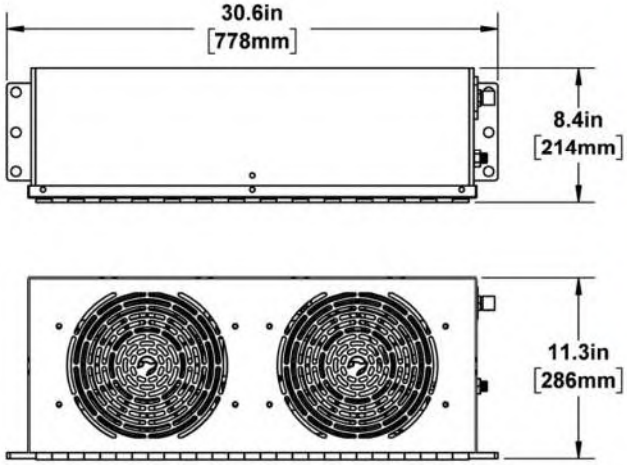

SPECIFICATIONS

Size/Dimension..... 30.6" L x 8.4" W x 11.3" H
BTU/Capacity..... 36,000 BTU/hr
Weight ..... 75 lbs
Condenser Coil..... Copper Tubing Aluminum Fin
Airflow..... 1200 CFM
Current Draw ..... 12 amps @ 12VDC
6 amps @ 24VDC
Fan..... 9" Condenser Fans

IMACA CONDITIONS

Capacity shown at IMACA conditions: 100°F (38°C)
Ambient-Condenser/ 90°F (32°C) DB & 75°F (24°C)
WB / 50% RH and condensing temperature of 135°F (57°C)

SERVICE PARTS	PART NO.
Condenser Coil	420-860R 420-860L
Condenser Fan - 9", 12VDC Pusher	3581
Condenser Fan - 9", 24VDC Pusher	25-14824-90-24
Receiver Drier	7129
Receiver Drier - Vertical Setup	523-092-9
Receiver Drier Mount Bracket	523-100-HD
Condenser Fan Mount Feet	3578
Condenser Fan Plate Assembly	520-HD100-2A
Condenser Screen	HA-102
Hose Assembly - Drier to Bulkhead	635-038-HA100-16
Hose Assembly - Condenser to Drier	635-038-HA100-18

OPTIONS

- HA-100-ZA - Z Bracket Assembly for Behind Cab Mounting

© 2026 Omega Heavy Duty

HA-91

HEAVY DUTY

The HA-91 is a heavy duty unit featuring a copper/aluminum coil with 1/4" reinforced base plate and 3/16" heavy gauge shell. This condenser is ideal for the roughest environments.



HA-91-12-HD.....12VDC

HA-91-24-HD.....24VDC

SPECIFICATIONS

Size/Dimension.....24.6"L x 11"W x 13" H

BTU/Capacity.....39,200 BTU/hr

Weight .....75 lbs

Condenser Coil.....Copper Tubing Aluminum Fin

Airflow.....1340 CFM

Current Draw .....16 amps @ 12VDC
8 amps @ 24VDC

Fan.....10" Condenser Fans

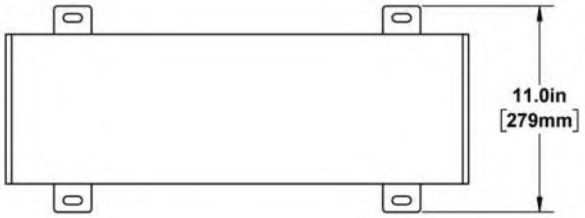

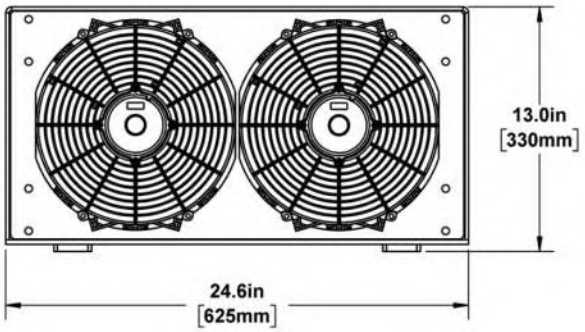

IMACA CONDITIONS

Capacity shown at IMACA conditions: 100°F (38°C)
Ambient-Condenser/ 90°F (32°C) DB & 75°F (24°C)
WB / 50% RH and condensing temperature of 135°F (57°C)

SERVICE PARTS.....PART NO.

Condenser Coil.....420-912

Condenser Fan - 10", 12VDC Pusher.....3583

Condenser Fan - 10", 24VDC Pusher.....3584

OPTIONS

- Puller Fans

Having trouble finding the right part for your application? We can help!

If you don't find what you are looking for, reach out and our team will custom build exactly the system you need. Contact Omega HD at sales@omegahd.com.

© 2026 Omega Heavy Duty

43-3050-2000

HEAVY DUTY

The 3050 is a low-profile, 3-fan condenser designed for high performance in tight spaces. Featuring 3 long-life fans and a durable gloss white powder coat finish on a 12GA steel housing.



43-3050-2000.....24VDC

SPECIFICATIONS

Size/Dimension.....41.4"L x 14.2" W x 7.4" H
BTU/Capacity.....47,500 BTU/hr
Weight .....65 lbs
Condenser Coil.....Copper Tubing Aluminum Fin
Airflow.....1885 CFM
Current Draw .....12.3 amps @ 24VDC
Fan.....9" Condenser Fan

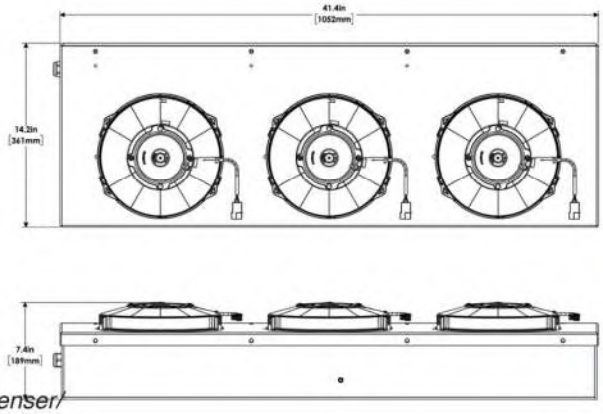

IMACA CONDITIONS

Capacity shown at IMACA conditions: 100°F (38°C) Ambient-Condenser/ 90°F (32°C) DB & 75°F (24°C) WB / 50% RH and condensing temperature of 135°F (57°C)

SERVICE PARTS	PART NO.
Condenser Coil	10-10-3050
Condenser Fan - 9", 24VDC Puller	3499

Having trouble finding the right part for your application? We can help!

If you don't find what you are looking for, reach out and our team will custom build exactly the system you need. Contact Omega HD at sales@omegahd.com.

© 2026 Omega Heavy Duty

HA-100-3-LRG

HEAVY DUTY



The HA-100-3-LRG unit is a high-capacity condenser in a 12GA steel shell with three 10" power fans enabling high BTU output. This versitile condenser can be mounted above or below deck and includes a drier and binary switch.

HA-100-3-LRG-12.....12VDC

HA-100-3-LRG.....24VDC

SPECIFICATIONS

Size/Dimension.....40" L x 10.4" W x 12.6" H
BTU/Capacity.....63,450 BTU/hr
Weight .....75 lbs
Condenser Coil.....Copper Tubing Aluminum Fin
Airflow.....2100 CFM
Current Draw .....28 amps @ 12VDC
14 amps @ 24VDC
Fan.....10" Condenser Fans

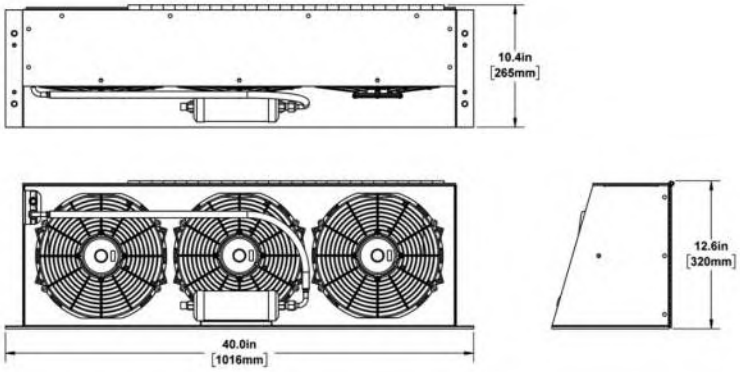

IMACA CONDITIONS

Capacity shown at IMACA conditions: 100°F (38°C)
Ambient-Condenser/ 90°F (32°C) DB & 75°F (24°C)
WB / 50% RH and condensing temperature of 135°F (57°C)

SERVICE PARTS	PART NO.
Condenser Coil	420-800A
Condenser Fan - 10", 12VDC Puller	3560
Condenser Fan - 10", 24VDC Puller	3561
Receiver Drier	7502
Condenser Screen	301-215-2
Pressure Switch, Binary	1512

OPTIONS

- Aluminum Casing

Having trouble finding the right part for your application? We can help!

If you don't find what you are looking for, reach out and our team will custom build exactly the system you need. Contact Omega HD at sales@omegahd.com.

© 2026 Omega Heavy Duty