POWER CONDENSER ASSEMBLIES

TUBE AND FIN CONDENSERS

© 2026 Omega Heavy Duty

891024

TUBE AND FIN



The 891024 is a roof-mounted condenser featuring a 12GA aluminum shell and an 11" power fan. It is enclosed with a molded ABS plastic cover that provides durability and a clean appearance. An innovative 2-row angled copper/aluminum coil allows this unit to maximize heat-rejection.

891024-12V.....12VDC

SPECIFICATIONS

Size/Dimension.....36.3"L x 25.7" W x 6.3" H
BTU/Capacity.....26,000 BTU/hr
Weight .....35 lbs
Condenser Coil.....Copper Tubing Aluminum Fin
Airflow.....930 CFM
Current Draw .....8.6 amps @ 12VDC
Fan.....11" Condenser Fan

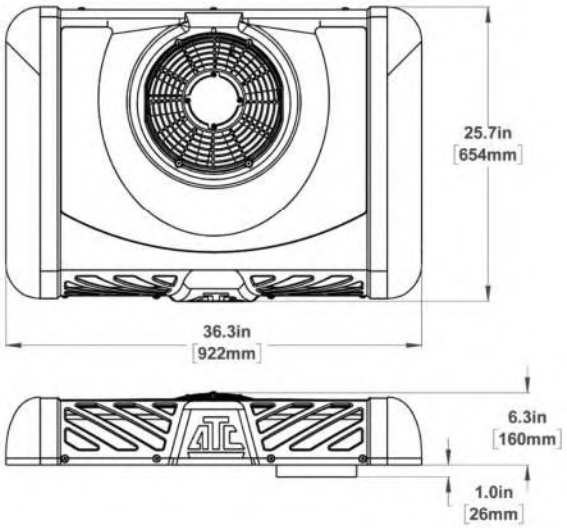

IMACA CONDITIONS

Capacity shown at IMACA conditions: 100°F (38°C) Ambient-Condenser/ 90°F (32°C) DB & 75°F (24°C) WB / 50% RH and condensing temperature of 135°F (57°C)

SERVICE PARTS	PART NO.
Condenser Coil, Blue Fin	M970271
Condenser Fan - 11", 12VDC Puller	25-14852-S
Receiver Drier	7502
Refrigerant Sight Glass	4150

OPTIONS

- Engine Driven Compressor

Having trouble finding the right part for your application? We can help!

If you don't find what you are looking for, reach out and our team will custom build exactly the system you need. Contact Omega HD at sales@omegahd.com.

© 2026 Omega Heavy Duty

891008

TUBE AND FIN



The 891008 condenser features a black textured, powder-coated 16GA satin coat steel housing and dual 10" power fans. Its robust design allows the unit to also be roof or wall mounted.

891008-12V.....12VDC

891008-24V.....24VDC

SPECIFICATIONS

Size/Dimension.....27.7"L x 14.6" W x 7.3" H
BTU/Capacity.....27,500 BTU/hr
Weight .....28 lbs
Condenser Coil.....Copper Tubing Aluminum Fin
Airflow.....1400 CFM
Current Draw .....14 amps @ 12VDC
8 amps @ 24VDC
Fan.....10" Condenser Fans

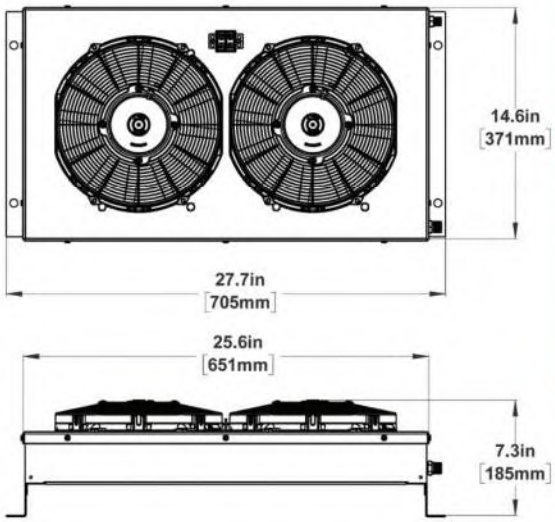

IMACA CONDITIONS

Capacity shown at IMACA conditions: 100°F (38°C)
Ambient-Condenser/ 90°F (32°C) DB & 75°F (24°C)
WB / 50% RH and condensing temperature of 135°F (57°C)

SERVICE PARTS	PART NO.
Condenser Coil, Blue Fin	875002
Condenser Fan - 10", 12VDC Puller	3560
Condenser Fan - 10", 24VDC Puller	3561

OPTIONS

- Engine Driven Compressor

Having trouble finding the right part for your application? We can help!

If you don't find what you are looking for, reach out and our team will custom build exactly the system you need. Contact Omega HD at sales@omegahd.com.

© 2026 Omega Heavy Duty

K TCK COND SPLIT

TUBE AND FIN

The K TCK COND SPLIT is designed with a copper/aluminum coil, a diamond plate aluminum shroud, one 11" power fan and drier. This unit looks great on the back of a semi truck but can be installed in any application.



K TCK COND SPLIT.....12VDC

SPECIFICATIONS

Size/Dimension.....21.8" L x 20" W x 8.7 H
BTU/Capacity.....29,000 BTU/hr
Weight .....30 lbs
Condenser Coil.....Copper Tubing Aluminum Fin
Airflow.....790 CFM
Current Draw .....9 amps @ 12VDC
Fan.....11" Condenser Fan

IMACA CONDITIONS

Capacity shown at IMACA conditions: 100°F (38°C) Ambient-Condenser/ 90°F (32°C) DB & 75°F (24°C) WB / 50% RH and condensing temperature of 135°F (57°C)

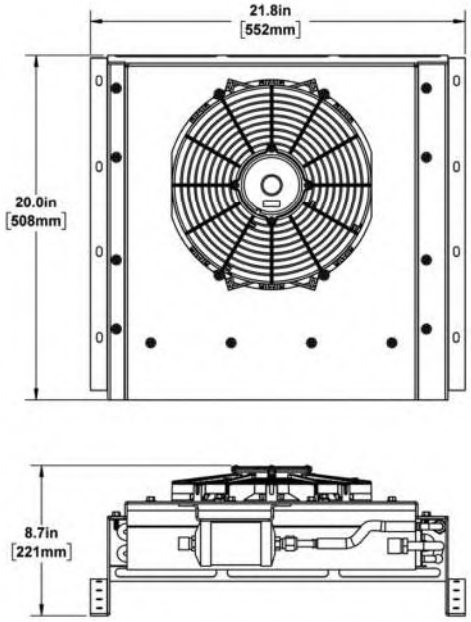

SERVICE PARTS	PART NO.
Condenser Coil	420-909
Condenser Fan - 11", 12VDC Puller	3562
Receiver Drier	7140

OPTIONS

- 24VDC Available Upon Request
- Stainless Steel Shroud

Having trouble finding the right part for your application? We can help!

If you don't find what you are looking for, reach out and our team will custom build exactly the system you need. Contact Omega HD at sales@omegahd.com.

© 2026 Omega Heavy Duty

420-904-100

TUBE AND FIN

The 420-904-100 unit is a mid-profile condenser featuring a 2 row copper/aluminum coil, 16GA steel shroud, and dual 10" power fans for efficient, reliable cooling in compact installations.

420-904-100-12.....12VDC

420-904-100.....24VDC



SPECIFICATIONS

Size/Dimension..... 27.7" L x 16.1"W x 4.8"H
BTU/Capacity..... 31,000 BTU/hr
Weight ..... 25 lbs
Condenser Coil..... Copper Tubing Aluminum Fin
Airflow..... 1400 CFM
Current Draw ..... 16 amps @ 12VDC
8 amps @ 24VDC
Fan..... 10" Condenser Fans

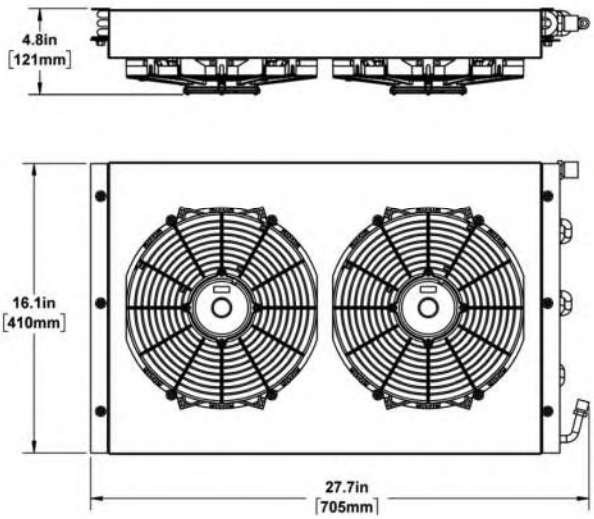

IMACA CONDITIONS

Capacity shown at IMACA conditions: 100°F (38°C)
Ambient-Condenser/ 90°F (32°C) DB & 75°F (24°C)
WB / 50% RH and condensing temperature of 135°F (57°C)

SERVICE PARTS.....PART NO.

Condenser Coil.....420-904
Condenser Fan - 10", 12VDC Puller.....3560
Condenser Fan - 10", 24VDC Puller.....3561

OPTIONS

- Variety of Mounting and Standoff Brackets
- Aluminum Shroud
- Different Size Assemblies Available Upon Request. See Condenser Coil List.

Having trouble finding the right part for your application? We can help!

If you don't find what you are looking for, reach out and our team will custom build exactly the system you need. Contact Omega HD at sales@omegahd.com.

© 2026 Omega Heavy Duty

HA-977G2-500

TUBE AND FIN

The HA-977-G2 condenser is designed for rugged mining applications. It features a copper/aluminum coil with a steel shroud and one 14" power fan providing high output for its size.



HA-977G2-500-12.....12VDC
HA-977G2-500.....24VDC

SPECIFICATIONS

Size/Dimension.....23.1" L x 17.6" W x 6.2" H
BTU/Capacity.....34,500 BTU/hr
Weight .....25 lbs
Condenser Coil.....Copper Tubing Aluminum Fin
Airflow.....975 CFM
Current Draw .....8 amps @ 12VDC
4 amps @ 24VDC
Fan.....14" Condenser Fan

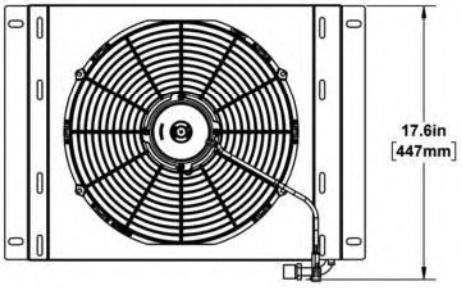

IMACA CONDITIONS

Capacity shown at IMACA conditions: 100°F (38°C) Ambient-Condenser/ 90°F (32°C) DB & 75°F (24°C) WB / 50% RH and condensing temperature of 135°F (57°C)

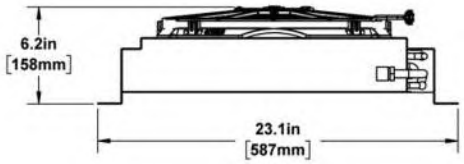

SERVICE PARTS	PART NO.
Condenser Coil	420-909
Condenser Fan - 14", 12VDC Puller	3571
Condenser Fan - 14", 24VDC Puller	3572

Having trouble finding the right part for your application? We can help!

If you don't find what you are looking for, reach out and our team will custom build exactly the system you need. Contact Omega HD at sales@omegahd.com.

© 2026 Omega Heavy Duty

43-3040

TUBE AND FIN

The 3040 aluminum single-fan wedge condenser provides high capacity in a small package. The condenser can be ordered to mount above deck or below deck. Available with left-hand or right-hand side refrigeration and electrical connection points.



43-3040-1112.....12VDC Above Deck Mount
43-3040-2112.....24VDC Above Deck Mount
43-3040-1112U.....12VDC Below Deck Mount
43-3040-2112U.....24VDC Below Deck Mount

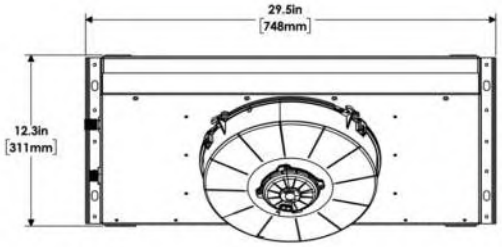

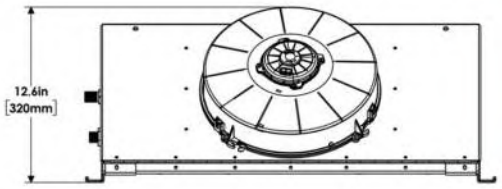

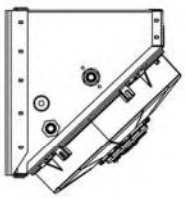

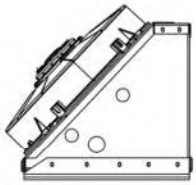

SPECIFICATIONS

Size/Dimension.....29.5" L x 12.3" W x 12.6" H
BTU/Capacity.....36,900 BTU/hr
Weight .....40 lbs
Condenser Coil.....Copper Tubing Aluminum Fin
Airflow.....1430 CFM
Current Draw .....23 amps @ 12VDC
13 amps @ 24VDC
Fan.....12" Condenser Fan

IMACA CONDITIONS

Capacity shown at IMACA conditions: 100°F (38°C)
Ambient-Condenser/ 90°F (32°C) DB & 75°F (24°C)
WB / 50% RH and condensing temperature of 135°F (57°C)

SERVICE PARTS	PART NO.
Condenser Coil	10-10-3040
Condenser Fan - 12", 12VDC Puller	14-10-1230
Condenser Fan - 12", 24VDC Puller	14-10-1231
Receiver Drier	13-10-1011
Pressure Switch, Binary	1512
Relay, 12VDC	1261
Relay, 24VDC	1262

Having trouble finding the right part for your application? We can help!

If you don't find what you are looking for, reach out and our team will custom build exactly the system you need. Contact Omega HD at sales@omegahd.com.

© 2026 Omega Heavy Duty

43-3010

TUBE AND FIN

The 3010 condenser is versatile and rugged. Ideal for use in high dust environments. Constructed from steel and finished with a durable gloss white powder coat finish. The 3010 can be mounted to horizontal or vertical surfaces.



43-3010-1000-12VDC.....12VDC
43-3010-2000-24VDC.....24VDC

SPECIFICATIONS

Size/Dimension.....20.4" L x 15.2" W x 10.2" H
BTU/Capacity.....39,000 BTU/hr
Weight .....36 lbs
Condenser Coil.....Copper Tubing Aluminum Fin
Airflow.....1285 CFM
Current Draw .....11 amps @ 12VDC
5.5 amps @ 24VDC
Fan.....14" Condenser Fan

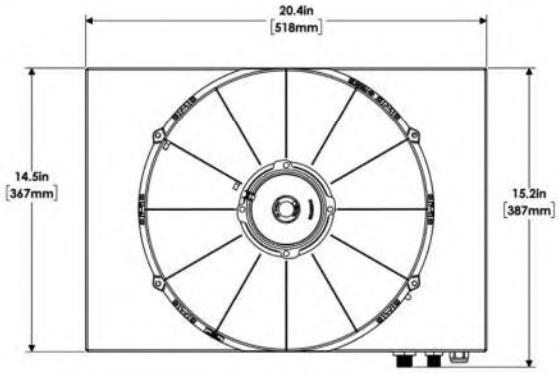

IMACA CONDITIONS

Capacity shown at IMACA conditions: 100°F (38°C) Ambient-Condenser/ 90°F (32°C) DB & 75°F (24°C) WB / 50% RH and condensing temperature of 135°F (57°C)

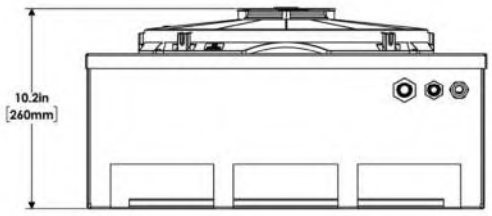

SERVICE PARTS	PART NO.
Condenser Coil	10-10-0060
Condenser Fan - 14", 12VDC Puller	3571MP
Condenser Fan - 14", 24VDC Puller	3572MP

Having trouble finding the right part for your application? We can help!

If you don't find what you are looking for, reach out and our team will custom build exactly the system you need. Contact Omega HD at sales@omegahd.com.

© 2026 Omega Heavy Duty

43-3060

TUBE AND FIN



The 3060 single-fan condenser is designed for larger cab applications. It can be mounted horizontally or vertically. Steel construction, finished with a durable gloss white powder coat finish. Includes a receiver drier and binary pressure switch.

43-3060-1112.....12VDC

43-3060-2112.....24VDC

SPECIFICATIONS

Size/Dimension.....27.1" L x 23.6" W x 9" H

BTU/Capacity.....44,400 BTU/hr

Weight .....50 lbs

Condenser Coil.....Copper Tubing Aluminum Fin

Airflow.....1535 CFM

Current Draw .....12 amps @ 12VDC
6 amps @ 24VDC

Fan.....16" Condenser Fan

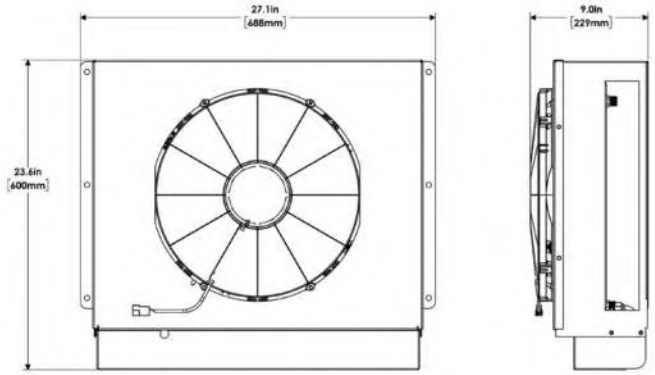

IMACA CONDITIONS

Capacity shown at IMACA conditions: 100°F (38°C)
Ambient-Condenser/ 90°F (32°C) DB & 75°F (24°C)
WB / 50% RH and condensing temperature of 135°F (57°C)

SERVICE PARTS	PART NO.
Condenser Coil	10-10-7070
Condenser Fan - 16", 12VDC Puller	3568MP
Condenser Fan - 16", 24VDC Puller	3569MP
Receiver Drier	7541
Pressure Switch, Binary	1512
Relay, 12VDC	1261
Relay, 24VDC	1262

Having trouble finding the right part for your application? We can help!

If you don't find what you are looking for, reach out and our team will custom build exactly the system you need. Contact Omega HD at sales@omegahd.com.

© 2026 Omega Heavy Duty

891027

TUBE AND FIN



The 891027 is a high-profile, high-capacity rooftop condenser featuring a black textured, powder-coated 16GA satin coat steel housing and dual 10" power fans. Cam locks allow quick access to the 4-row copper/aluminum coil, enabling easy cleaning.

891027-12VD.....12VDC

891027-24VD.....24VDC

SPECIFICATIONS

Size/Dimension.....27.9"L x 17" W x 8.4" H
BTU/Capacity.....47,000 BTU/hr
Weight.....35 lbs
Condenser Coil.....Copper Tubing Aluminum Fin
Airflow.....1500 CFM
Current Draw.....14 amps @ 12VDC
8 amps @ 24VDC
Fan.....10" Condenser Fans

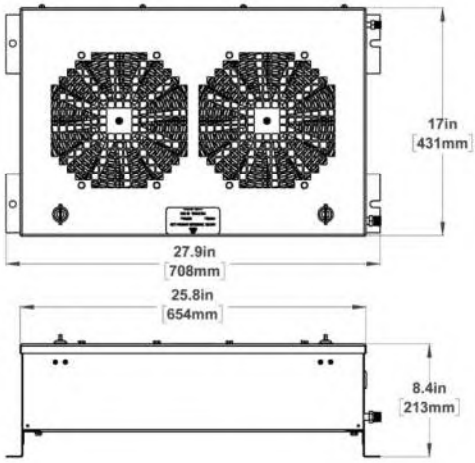

IMACA CONDITIONS

Capacity shown at IMACA conditions: 100°F (38°C) Ambient-Condenser/ 90°F (32°C) DB & 75°F (24°C) WB / 50% RH and condensing temperature of 135°F (57°C)

SERVICE PARTS	PART NO.
Condenser Coil, Blue Fin	875117
Condenser Fan - 10", 12VDC Pusher	3583
Condenser Fan - 10", 24VDC Pusher	3584

Having trouble finding the right part for your application? We can help!

If you don't find what you are looking for, reach out and our team will custom build exactly the system you need. Contact Omega HD at sales@omegahd.com.

© 2026 Omega Heavy Duty

43-3045

TUBE AND FIN



The 3045 dual-fan wedge condenser delivers increased condensing capacity in the same compact footprint as the 3040. Constructed from brushed-finish aluminum, it is available with left-hand or right-hand refrigeration/electrical connections. Can be ordered to mount above-deck or below-deck for versatile, high-performance installations.

43-3045-1112.....12VDC Above Deck Mount
43-3045-2112.....24VDC Above Deck Mount
43-3045-1112U.....12VDC Below Deck Mount
43-3045-2112U.....24VDC Below Deck Mount

SPECIFICATIONS

Size/Dimension..... 29.5" L x 12.5"W x 11.9" H
BTU/Capacity..... 47,900 BTU/hr
Weight ..... 40 lbs
Condenser Coil..... Copper Tubing Aluminum Fin
Airflow..... 2195 CFM
Current Draw ..... 23 amps @ 12VDC
13 amps @ 24VDC
Fan..... 12" Condenser Fan

IMACA CONDITIONS

Capacity shown at IMACA conditions: 100°F (38°C) Ambient-Condenser/ 90°F (32°C) DB & 75°F (24°C) WB / 50% RH and condensing temperature of 135°F (57°C)

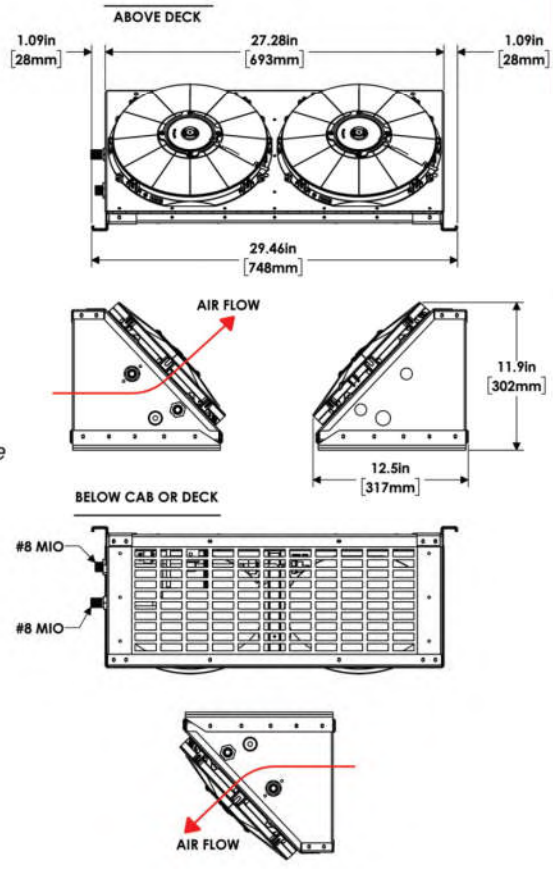

SERVICE PARTS	PART NO.
Condenser Coil	10-10-3040
Condenser Fan - 12", 12VDC Puller	3564MP
Condenser Fan - 12", 24VDC Puller	25-14815-25
Receiver Drier	13-10-1011
Pressure Switch, Binary	1512
Relay, 12VDC	1261
Relay, 24VDC	1262

Having trouble finding the right part for your application? We can help!

If you don't find what you are looking for, reach out and our team will custom build exactly the system you need. Contact Omega HD at sales@omegahd.com.

© 2026 Omega Heavy Duty

43-3085

TUBE AND FIN



The 3085 is a slim, dual-fan, high-capacity condenser designed for horizontal or vertical mounting, featuring two long-life fans and a durable gloss white powder-coated 16GA steel housing and includes a receiver drier with mounting point that accomodates vertical or horizontal mounting.

43-3085-1000.....12VDC

43-3085-2000.....24VDC

SPECIFICATIONS

Size/Dimension.....37.2" L x 18.4" W x 8.9" H
BTU/Capacity.....63,100 BTU/hr
Weight .....52 lbs
Condenser Coil.....Copper Tubing Aluminum Fin
Airflow.....3910 CFM
Current Draw .....32 amps @ 12VDC
16 amps @ 24VDC
Fan.....16" Condenser Fans

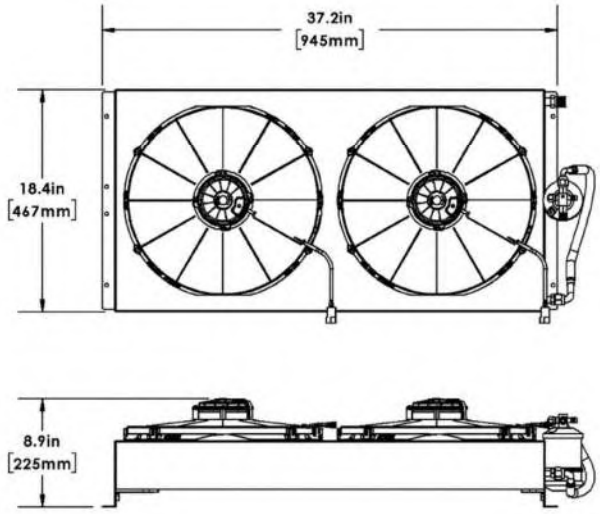

IMACA CONDITIONS

Capacity shown at IMACA conditions: 100°F (38°C) Ambient-Condenser/ 90°F (32°C) DB & 75°F (24°C) WB / 50% RH and condensing temperature of 135°F (57°C)

SERVICE PARTS	PART NO.
Condenser Coil	10-10-3085
Condenser Fan - 16", 12VDC Puller	3568HP
Condenser Fan - 16", 24VDC Puller	3569HP
Receiver Drier	7123

Having trouble finding the right part for your application? We can help!

If you don't find what you are looking for, reach out and our team will custom build exactly the system you need. Contact Omega HD at sales@omegahd.com.

© 2026 Omega Heavy Duty

891029-12V

TUBE AND FIN



The 891029-12V is a high-capacity, roof-mounted condenser featuring a copper/aluminum coil, 12GA aluminum shell, and dual 11" power fans. The unit is finished with a molded ABS plastic cover, providing both long-term durability and an attractive, clean appearance.

891029-12V.....12VDC

SPECIFICATIONS

Size/Dimension.....51.7"L x 33.5" W x 7.7" H
BTU/Capacity.....65,000 BTU/hr
Weight .....60 lbs
Condenser Coil.....Copper Tubing Aluminum Fin
Airflow.....1860 CFM
Current Draw .....21 amps @ 12VDC
Fan.....11" Condenser Fans

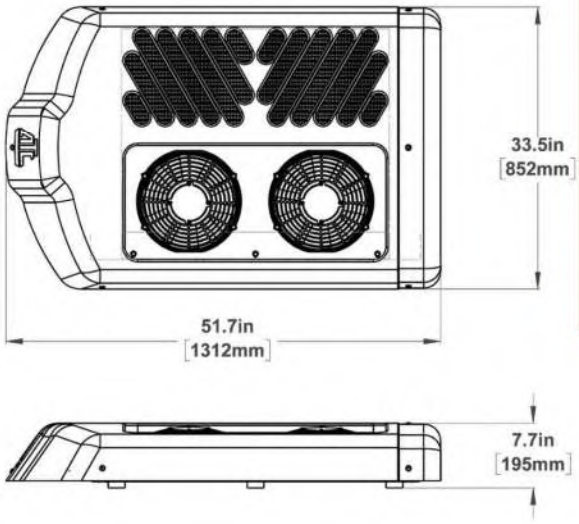

IMACA CONDITIONS

Capacity shown at IMACA conditions: 100°F (38°C) Ambient-Condenser/ 90°F (32°C) DB & 75°F (24°C) WB / 50% RH and condensing temperature of 135°F (57°C)

SERVICE PARTS	PART NO.
Condenser Coil, Blue Fin	M970273
Condenser Fan - 11", 12VDC Puller	25-14852-S
Receiver Drier	7502
Refrigerant Sight Glass	4150

Having trouble finding the right part for your application? We can help!

If you don't find what you are looking for, reach out and our team will custom build exactly the system you need. Contact Omega HD at sales@omegahd.com.

© 2026 Omega Heavy Duty

43-3080

TUBE AND FIN



The 3080 condenser is a 3-fan high-capacity unit with a brushed aluminum housing and coil guard. Ideal for use with large or multiple mid-size evaporators. The unit can be ordered for mounting above deck or below-deck and includes a receiver drier. The 3080 incorporates a relay and high pressure switch.

43-3080-1111.....12VDC Under Mount
43-3080-2111.....24VDC Under Mount
43-3080U-1111.....12VDC Above Mount
43-3080U-2111.....24VDC Above Mount

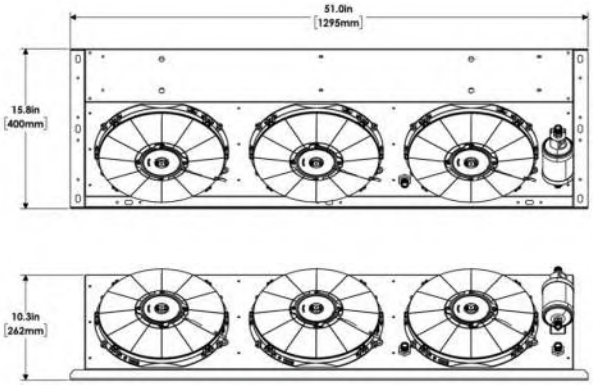

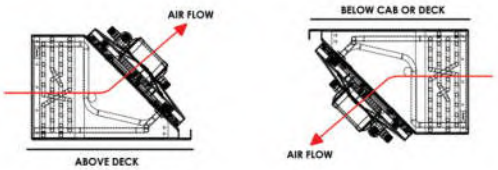

SPECIFICATIONS

Size/Dimension.....51" L x 15.8" W x 10.3" H
BTU/Capacity.....54,000 BTU/hr
Weight .....50 lbs
Condenser Coil.....Copper Tubing Aluminum Fin
Airflow.....3000 CFM
Current Draw .....15 amps @ 12VDC
7.5 amps @ 24VDC
Fan.....12" Condenser Fans

IMACA CONDITIONS

Capacity shown at IMACA conditions: 100°F (38°C) Ambient-Condenser/ 90°F (32°C) DB & 75°F (24°C) WB / 50% RH and condensing temperature of 135°F (57°C)

SERVICE PARTS	PART NO.
Condenser Coil, Blue Fin	10-10-3080
Condenser Fan - 12", 12VDC Puller	3564MP
Condenser Fan - 12", 24VDC Puller	25-14815-25
Receiver Drier	13-10-1011
Pressure Switch, High	12-10-1004
Relay, 12V	12-53-2003
Relay, 24V	12-53-4003
Wiring Harness	33-3080-001

OPTIONS

- Evaporator
- Compressor
- Refrigerant Hose Kit

Having trouble finding the right part for your application? We can help!

If you don't find what you are looking for, reach out and our team will custom build exactly the system you need. Contact Omega HD at sales@omegahd.com.

© 2026 Omega Heavy Duty

43-3081

TUBE AND FIN

The 3081 condenser is a 3-fan high-capacity unit with a brushed aluminum finish. Ideal for use with large or multiple mid-size evaporators. This unit ships below deck but can be modified at install to either configuration.



43-3081-1000.....12VDC

43-3081-2000.....24VDC

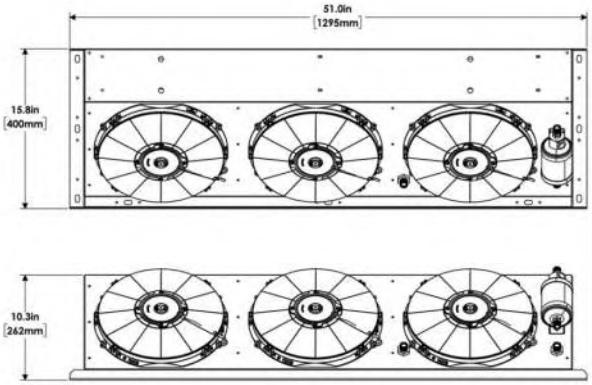

SPECIFICATIONS

Size/Dimension..... 51" L x 15.8" W x 10.3" H
BTU/Capacity..... 71,000 BTU/hr
Weight ..... 50 lbs
Condenser Coil..... Copper Tubing Aluminum Fin
Airflow..... 3295 CFM
Current Draw ..... 30 amps @ 12VDC
15 amps @ 24VDC
Fan..... 12" Condenser Fans

IMACA CONDITIONS

Capacity shown at IMACA conditions: 100°F (38°C) Ambient-Condenser/ 90°F (32°C) DB & 75°F (24°C) WB / 50% RH and condensing temperature of 135°F (57°C)

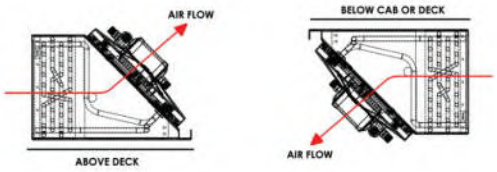

SERVICE PARTS	PART NO.
Condenser Coil, Blue Fin	10-10-3081
Condenser Fan - 12", 12VDC Puller	3564MP
Condenser Fan - 12", 24VDC Puller	25-14815-25
Receiver Drier	13-10-1011

Having trouble finding the right part for your application? We can help!

If you don't find what you are looking for, reach out and our team will custom build exactly the system you need. Contact Omega HD at sales@omegahd.com.

© 2026 Omega Heavy Duty