POWER CONDENSER ASSEMBLIES

MULTIFLOW CONDENSERS

© 2026 Omega Heavy Duty

420-855-NEXG

MULTIFLOW



The 420-855-NEXG unit is a low-profile condenser featuring a high-efficiency aluminum multiflow coil and dual 10" power fans, designed for reliable performance in tight installation spaces.

420-855-NEXG.....12VDC

420-855-NEXG-24.....24VDC

SPECIFICATIONS

Size/Dimension.....26.5" L x 12.2" W x 5.4" H
BTU/Capacity.....18,000 BTU/hr
Weight .....13 lbs
Condenser Coil.....Aluminum Multiflow
Airflow.....1400 CFM
Current Draw .....6 amps @ 12VDC
4 amps @ 24VDC
Fan.....10" Condenser Fans

IMACA CONDITIONS

N/A

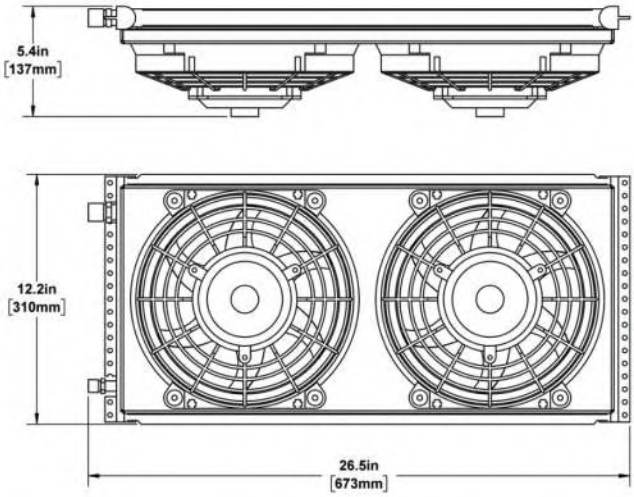

SERVICE PARTS	PART NO.
Condenser Coil	6306
Condenser Fan - 10", 12VDC Puller	430-040-DFW
Condenser Fan - 10", 24VDC Puller	3561

OPTIONS

- Variety of Mounting and Standoff Brackets
- Aluminum Shroud

Having trouble finding the right part for your application? We can help!

If you don't find what you are looking for, reach out and our team will custom build exactly the system you need. Contact Omega HD at sales@omegahd.com.

© 2026 Omega Heavy Duty

43-3025

MULTIFLOW



The 3025 is a rugged, low-profile condenser perfect for mounting to cab where space is limited. Pairs well with any 16,000-20,000 BTU evaporator. Available with optional attached drier. Finished with a durable gloss white powder coated finish.

43-3025-1000.....12VDC Condenser
43-3025-2000.....24VDC Condenser
43-3025-1100.....12VDC Condenser w/ Drier
43-3025-2100.....24VDC Condenser w/ Drier

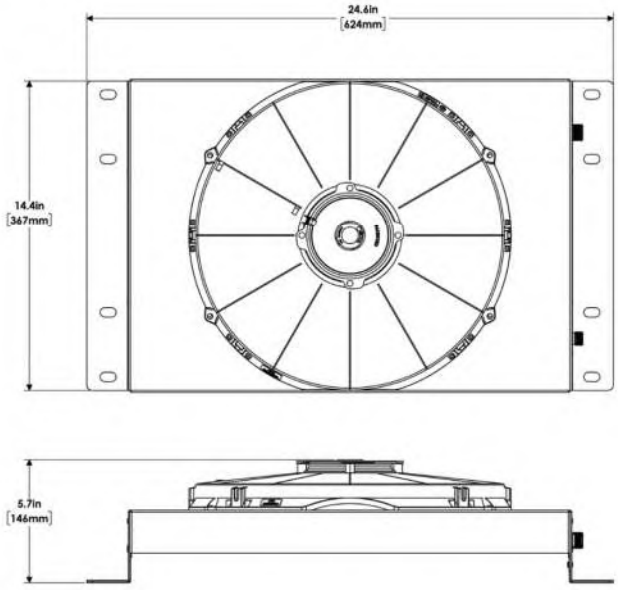

SPECIFICATIONS

Size/Dimension.....24.6" L x 14.4" W x 5.7" H
BTU/Capacity.....24,000 BTU/hr
Weight .....36 lbs
Condenser Coil.....Aluminum Multiflow
Airflow.....1285 CFM
Current Draw .....11 amps @ 12VDC
5.5 amps @ 24VDC
Fan.....14" Condenser Fan

IMACA CONDITIONS

N/A

SERVICE PARTS	PART NO.
Condenser Coil	10-10-3025
Condenser Fan - 14", 12VDC Puller	3571MP
Condenser Fan - 14", 24VDC Puller	3572MP
Receiver Drier	7502

OPTIONS

- Attached Drier

Having trouble finding the right part for your application? We can help!

If you don't find what you are looking for, reach out and our team will custom build exactly the system you need. Contact Omega HD at sales@omegahd.com.

© 2026 Omega Heavy Duty

891005

MULTIFLOW



The 891005 is a low-profile condenser constructed with a black textured, powder-coated 14GA satin coat steel housing and dual 10" power fans. Its aluminum multiflow coil delivers high heat-rejection performance, while the robust enclosure design allows the unit to also be roof or wall mounted.

891005-12V.....12VDC

891005-12VD.....12VDC With Connector

891005-24V.....24VDC

891005-24VD.....24VDC With Connector

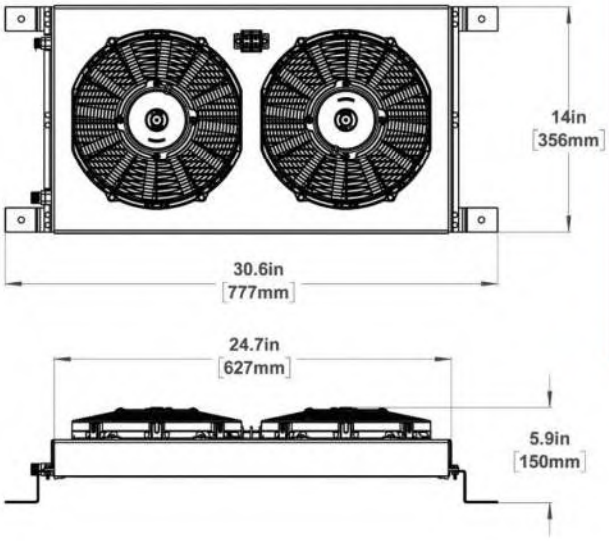

SPECIFICATIONS

Size/Dimension..... 30.6"L x 14" W x 5.9" H
BTU/Capacity..... 28,000 BTU/hr
Weight ..... 15 lbs
Condenser Coil..... Aluminum Multiflow
Airflow..... 1400 CFM
Current Draw ..... 14 amps @ 12VDC
7 amps @ 24VDC
Fan..... 10" Condenser Fans

IMACA CONDITIONS

N/A

SERVICE PARTS	PART NO.
Condenser Coil	6310
Condenser Fan - 10", 12VDC Puller	3560
Condenser Fan - 10", 24VDC Puller	3561

Having trouble finding the right part for your application? We can help!

If you don't find what you are looking for, reach out and our team will custom build exactly the system you need. Contact Omega HD at sales@omegahd.com.

© 2026 Omega Heavy Duty

43-3030

MULTIFLOW



The 3030 condenser can be mounted horizontally or vertically. Ideal for use with any mid-size evaporator. Finished with a durable gloss white powder coat on 16GA steel. Includes a binary pressure switch, relay, and drier.

43-3030-1112.....12VDC

43-3030-2112.....24VDC

SPECIFICATIONS

Size/Dimension.....29.7"L x 17.6"W x 8.1" H
BTU/Capacity.....32,000 BTU/hr
Weight .....38 lbs
Condenser Coil.....Aluminum Multiflow
Airflow.....1500 CFM
Current Draw .....15 amps @ 12VDC
7 amps @ 24VDC
Fan.....12" Condenser Fan

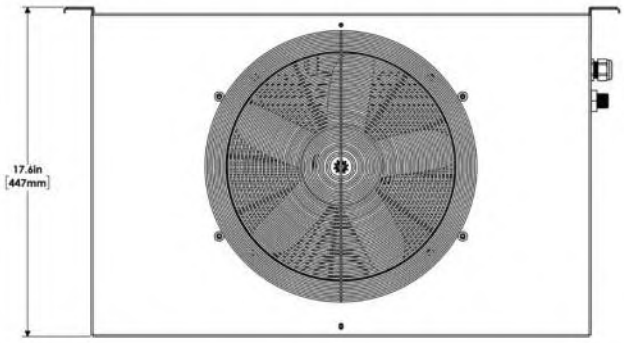

IMACA CONDITIONS

N/A

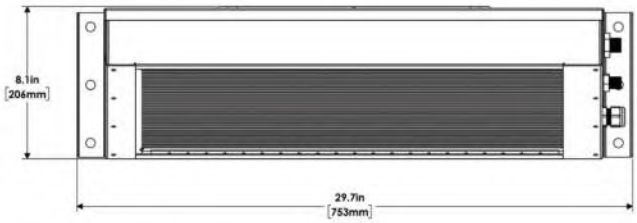

SERVICE PARTS	PART NO.
Condenser Coil	10-10-3030
Condenser Fan - 12", 12VDC Pusher	3600
Condenser Fan - 12", 24VDC Pusher	3601
Receiver Drier	7502
Pressure Switch, Binary	1512
Relay, 12VDC	1261
Relay, 24VDC	1262

OPTIONS

- Vertical Mount Tube.....35-7060-022

Having trouble finding the right part for your application? We can help!

If you don't find what you are looking for, reach out and our team will custom build exactly the system you need. Contact Omega HD at sales@omegahd.com.

© 2026 Omega Heavy Duty

HA-241202

MULTIFLOW

The HA-241202 features double stacked multiflow coils with two 10" power fans. Performs admirably in a compact form, allowing high heat rejection when space is limited.



HA-241202-500.....12VDC

HA-241202-550.....24VDC

SPECIFICATIONS

Size/Dimension.....27.8" L x 12.3" W x 5.3" H
BTU/Capacity.....42,000 BTU/hr
Weight .....20 lbs
Condenser Coil.....2x Aluminum Multiflow
Airflow.....1400 CFM
Current Draw .....16 amps @ 12VDC
8 amps @ 24VDC
Fan.....10" Condenser Fans

IMACA CONDITIONS

N/A

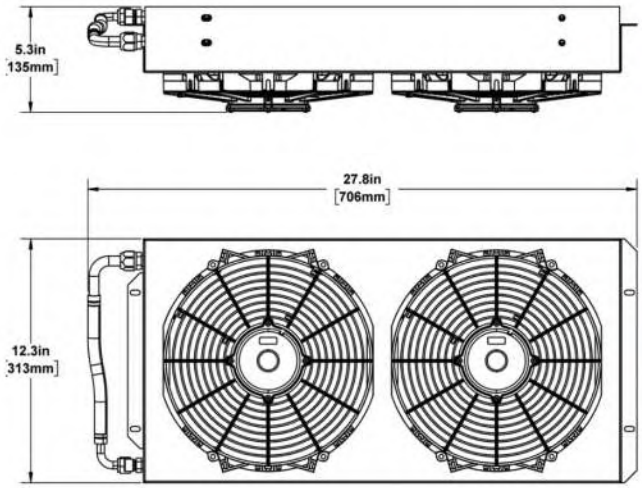

SERVICE PARTS	PART NO.
Condenser Coil	24-30228
Condenser Fan - 10", 12VDC Puller	3560
Condenser Fan - 10", 24VDC Puller	3561

OPTIONS

- Variety of Mounting and Standoff Brackets

Having trouble finding the right part for your application? We can help!

If you don't find what you are looking for, reach out and our team will custom build exactly the system you need. Contact Omega HD at sales@omegahd.com.

© 2026 Omega Heavy Duty

43-3062-1000

MULTIFLOW

The 3062 condenser is a 2-fan below deck skirt-mounted system and appropriate for bus applications. The unit includes a receiver drier and high-pressure switch. Finished with a matte-black textured powder coat on 16GA steel to extend its service life.



43-3062-1000.....12VDC

SPECIFICATIONS

Size/Dimension.....35.8" L x 13.8" W x 10.4" H
BTU/Capacity.....64,800 BTU/hr
Weight .....44 lbs
Condenser Coil.....Aluminum Multiflow
Airflow.....1700 CFM
Current Draw .....16.2 amps @ 12VDC
Fan.....11" Condenser Fans

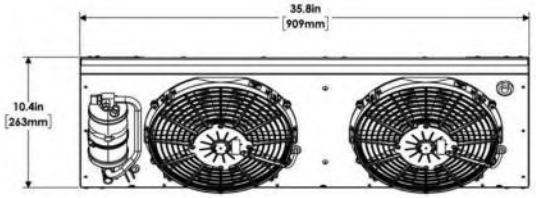

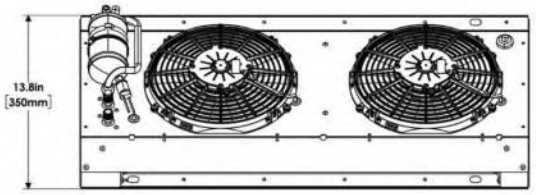

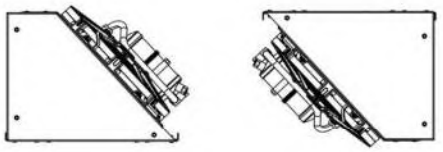

IMACA CONDITIONS

N/A

SERVICE PARTS	PART NO.
Condenser Coil	10-10-3062
Condenser Fan - 11", 12VDC Puller	3562
Receiver Drier	13-10-1016
Pressure Switch, High	12-10-1009

Having trouble finding the right part for your application? We can help!

If you don't find what you are looking for, reach out and our team will custom build exactly the system you need. Contact Omega HD at sales@omegahd.com.

© 2026 Omega Heavy Duty

43-3082

MULTIFLOW



The 3082 is a high-capacity, three-fan below deck skirt-mounted condenser engineered for demanding bus applications. It includes an integrated high-pressure switch and receiver drier. A durable black matte textured powder-coat finish on a rugged steel housing ensures long service life in harsh operating environments. Both fittings are #8 MIO.

43-3082-1000.....12VDC Below Deck Mount
43-3082-2000.....24VDC Below Deck Mount

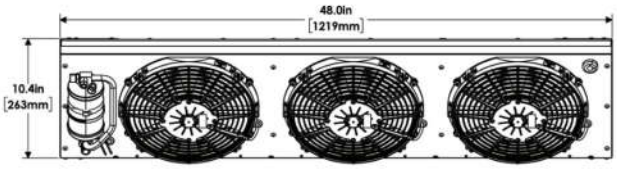

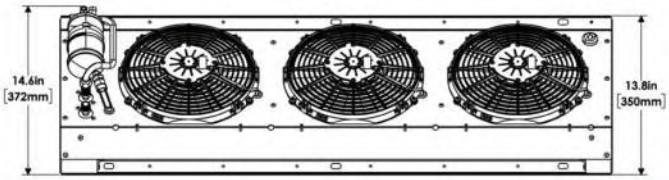

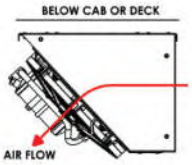

SPECIFICATIONS

Size/Dimension.....48" L x 13.8" W x 10.4" H
BTU/Capacity.....85,000 BTU/hr
Weight .....51 lbs
Condenser Coil.....Aluminum Multiflow
Airflow.....2532 CFM
Current Draw .....25 amps @ 12VDC
12.2 amps @ 24VDC
Fan.....11" Condenser Fan

IMACA CONDITIONS

N/A

SERVICE PARTS	PART NO.
Condenser Coil	10-10-3082
Condenser Fan - 11", 12VDC Puller	3562
Condenser Fan - 11", 24VDC Puller	3563
Receiver Drier	13-10-1016
Pressure Switch, High	12-10-1009

Having trouble finding the right part for your application? We can help!

If you don't find what you are looking for, reach out and our team will custom build exactly the system you need. Contact Omega HD at sales@omegahd.com.

© 2026 Omega Heavy Duty

43-3083

MULTIFLOW



The 3083 is a high-capacity, three-fan below deck skirt-mounted condenser engineered for demanding bus applications. It includes an integrated high-pressure switch and receiver drier. A durable black matte textured powder-coat finish on a rugged steel housing ensures long service life in harsh operating environments. #8 intake fitting and #10 discharge fitting.

43-3083-1000.....12VDC
43-3083-2000.....24VDC

SPECIFICATIONS

Size/Dimension.....48" L x 13.8" W x 10.4 H
BTU/Capacity.....85,000 BTU/hr
Weight .....51 lbs
Condenser Coil.....Aluminum Multiflow
Airflow.....2532 CFM
Current Draw .....25 amps @ 12VDC
12.2 amps @ 24VDC
Fan.....11" Condenser Fan

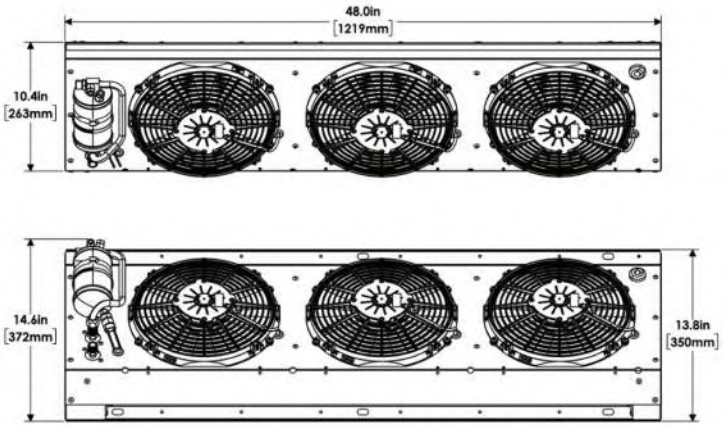

IMACA CONDITIONS

N/A

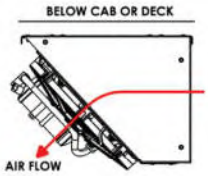

SERVICE PARTS	PART NO.
Condenser Coil	10-10-3082
Condenser Fan - 11", 12VDC Puller	3562
Condenser Fan - 11", 24VDC Puller	3563
Receiver Drier	13-10-1016
Pressure Switch, High	12-10-1009
Adapter Harness	33-3083-001

Having trouble finding the right part for your application? We can help!

If you don't find what you are looking for, reach out and our team will custom build exactly the system you need. Contact Omega HD at sales@omegahd.com.

© 2026 Omega Heavy Duty