*new!* ALL-FLEX™ (3-LEG)

*new!*

# ALL-FLEX™ 3-LEG

## ELECTRIC TABLE BASE

- **One part number for all sizes**
- Height adjustment range: 26"
  - Low: 23.2" | High: 49.2"
  *(excluding worksurface)*
- Adjusts to fit worksurfaces 48"x48"–84"x84"
- Adjustment speed: 1.5"/second
- Lifting capacity: 330 lbs. *(including worksurface)*
- Adjustable feet: 22" or 28"
- Crossbar includes guide markings to assist in setting width
- Top support expands to more effectively accommodate worksurfaces 24"–36" deep
- Notched cross channel offers ample space for keyboard tray glide tracks
- Anti-collision safety feature
- 86" power cable
- Quick start
- Digital keypad with 4 memory settings

## ADDITIONAL FEATURES

- Folding frame design for quick assembly
- Integrated control unit shelf
- Integrated storage for foot extension plate when not in use
- Integrated cable management
- Quiet adjustment
- Steel construction
- Low power consumption
- Lead free
- ADA compliant

HEIGHT ADJUSTABLE TABLES

esi

**esiergo.com | 800.833.3746**

Woman-Owned Business • GSA Contract Holder
2020 CAP & GIZA • Project Spec • IceEdge • Sketch-Up

## AVAILABLE WORKSURFACES

**ADDITIONAL WORKSURFACE OPTIONS ARE AVAILABLE. CALL CUSTOMER SERVICE FOR MORE INFORMATION.**

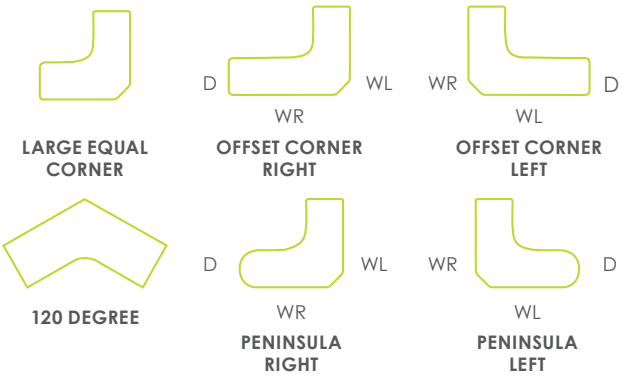


LARGE EQUAL CORNER | OFFSET CORNER RIGHT | OFFSET CORNER LEFT

120 DEGREE | PENINSULA RIGHT | PENINSULA LEFT

## BASE FINISH OPTIONS

**COMPLETE THE BASE MODEL # WITH THE 3 LETTER FINISH CODE**

| -SLV | -BLK | -WHT |
|---|---|---|
| RAL: 9022 | RAL: 9005 | RAL: 9016 |

**LT** = LONGER STANDARD LEAD TIMES MAY APPLY, PLEASE CONTACT CUSTOMER SERVICE FOR AVAILABILITY.

## EDGE DETAIL

**WORKSURFACES SHIP WITH STANDARD SQUARE PROFILE EDGE AND COORDINATING 3MM EDGE BAND.**

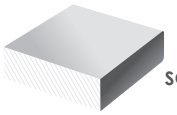

SQUARE PROFILE

## UNIVERSAL CORNER BRACKET

**ALLOWS BASE TO BE INSTALLED IN A EITHER A 90° OR 120° CONFIGURATION**

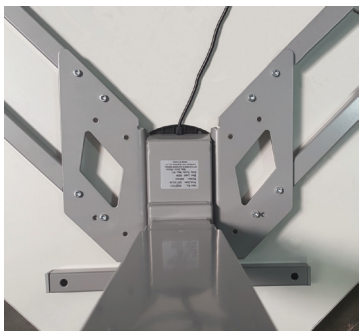

## FEET ADJUST TO 22" OR 28"

TOP VIEW

SIDE VIEW

## ALL-FLEX™ 3-LEG ORDERING OPTIONS

| | DIMENSIONS | | | BASE MODEL # SPECIFY FINISH | V29 BASE LIST | SURFACE MODEL # SPECIFY LAMINATE | V29 SURFACE LIST |
|---|---|---|---|---|---|---|---|
| | WL | WR | D | | | | |
| LARGE EQUAL CORNER | 60 | 60 | 24 | FLEX3-___ | $2,299 | 3EC606024__ | $1,164 |
| | 72 | 72 | 24 | FLEX3-___ | $2,299 | 3EC727224__ | $2,386 |
| | 84 | 84 | 24 | FLEX3-___ | $2,299 | 3EC848424__ | $2,477 |
| | 60 | 60 | 30 | FLEX3-___ | $2,299 | 3EC606030__ | $1,164 |
| | 72 | 72 | 30 | FLEX3-___ | $2,299 | 3EC727230__ | $2,386 |
| | 84 | 84 | 30 | FLEX3-___ | $2,299 | 3EC848430__ | $2,477 |
| 120 DEGREE | 48 | 48 | 24 | FLEX3-___ | $2,299 | 120-4824__ | $1,355 |
| | 60 | 60 | 24 | FLEX3-___ | $2,299 | 120-6024__ | $1,785 |
| | 72 | 72 | 24 | FLEX3-___ | $2,299 | 120-7224__ | $2,038 |
| | 48 | 48 | 30 | FLEX3-___ | $2,299 | 120-4830__ | $1,546 |
| | 60 | 60 | 30 | FLEX3-___ | $2,299 | 120-6030__ | $1,792 |
| OFFSET CORNER LEFT | 60 | 48 | 24 | FLEX3-___ | $2,299 | 3OCL604824__ | $1,041 |
| | 72 | 48 | 24 | FLEX3-___ | $2,299 | 3OCL724824__ | $1,137 |
| | 72 | 60 | 24 | FLEX3-___ | $2,299 | 3OCL726024__ | $1,294 |
| | 84 | 48 | 24 | FLEX3-___ | $2,299 | 3OCL844824__ | $1,342 |
| | 84 | 60 | 24 | FLEX3-___ | $2,299 | 3OCL846024__ | $1,519 |
| | 84 | 72 | 24 | FLEX3-___ | $2,299 | 3OCL847224__ | $2,367 |
| | 60 | 48 | 30 | FLEX3-___ | $2,299 | 3OCL604830__ | $1,055 |
| | 72 | 48 | 30 | FLEX3-___ | $2,299 | 3OCL724830__ | $1,151 |
| | 72 | 60 | 30 | FLEX3-___ | $2,299 | 3OCL726030__ | $1,294 |
| | 84 | 48 | 30 | FLEX3-___ | $2,299 | 3OCL844830_ | $1,342 |
| | 84 | 60 | 30 | FLEX3-___ | $2,299 | 3OCL846030__ | $1,519 |
| | 84 | 72 | 30 | FLEX3-___ | $2,299 | 3OCL847230__ | $2,367 |
| OFFSET CORNER RIGHT | 48 | 60 | 24 | FLEX3-___ | $2,299 | 3OCR486024__ | $1,041 |
| | 48 | 72 | 24 | FLEX3-___ | $2,299 | 3OCR487224__ | $1,137 |
| | 48 | 84 | 24 | FLEX3-___ | $2,299 | 3OCR488424__ | $1,342 |
| | 60 | 72 | 24 | FLEX3-___ | $2,299 | 3OCR607224__ | $1,294 |
| | 60 | 84 | 24 | FLEX3-___ | $2,299 | 3OCR608424__ | $1,519 |
| | 72 | 84 | 24 | FLEX3-___ | $2,299 | 3OCR728424__ | $2,367 |
| | 48 | 60 | 30 | FLEX3-___ | $2,299 | 3OCR486030__ | $1,055 |
| | 48 | 72 | 30 | FLEX3-___ | $2,299 | 3OCR487230__ | $1,151 |
| | 60 | 72 | 30 | FLEX3-___ | $2,299 | 3OCR607230__ | $1,342 |
| | 48 | 84 | 30 | FLEX3-___ | $2,299 | 3OCR488430__ | $1,294 |
| | 60 | 84 | 30 | FLEX3-___ | $2,299 | 3OCR608430__ | $1,519 |
| | 72 | 84 | 30 | FLEX3-___ | $2,299 | 3OCR728430__ | $2,367 |
| PENINSULA LEFT | 72 | 48 | 30 | FLEX3-___ | $2,299 | 3PL724830__ | $1,123 |
| | 72 | 60 | 30 | FLEX3-___ | $2,299 | 3PL726030__ | $1,280 |
| | 84 | 48 | 30 | FLEX3-___ | $2,299 | 3PL844830__ | $1,307 |
| | 84 | 60 | 30 | FLEX3-___ | $2,299 | 3PL846030__ | $1,499 |
| | 84 | 72 | 30 | FLEX3-___ | $2,299 | 3PL847230__ | $2,367 |
| PENINSULA RIGHT | 48 | 72 | 30 | FLEX3-___ | $2,299 | 3PR487230__ | $1,123 |
| | 60 | 72 | 30 | FLEX3-___ | $2,299 | 3PR607230__ | $1,280 |
| | 48 | 84 | 30 | FLEX3-___ | $2,299 | 3PR488430__ | $1,307 |
| | 60 | 84 | 30 | FLEX3-___ | $2,299 | 3PR608430__ | $1,499 |
| | 72 | 84 | 30 | FLEX3-___ | $2,299 | 3PR728430__ | $2,367 |

*new!* ALL-FLEX™ (3-LEG)

HEIGHT ADJUSTABLE TABLES


**esiergo.com | 800.833.3746**

Woman-Owned Business • GSA Contract Holder

2020 CAP & GIZA • Project Spec • IceEdge • Sketch-Up

## ALL-FLEX™
90° CONFIGURATION

ADJUSTABLE WIDTH

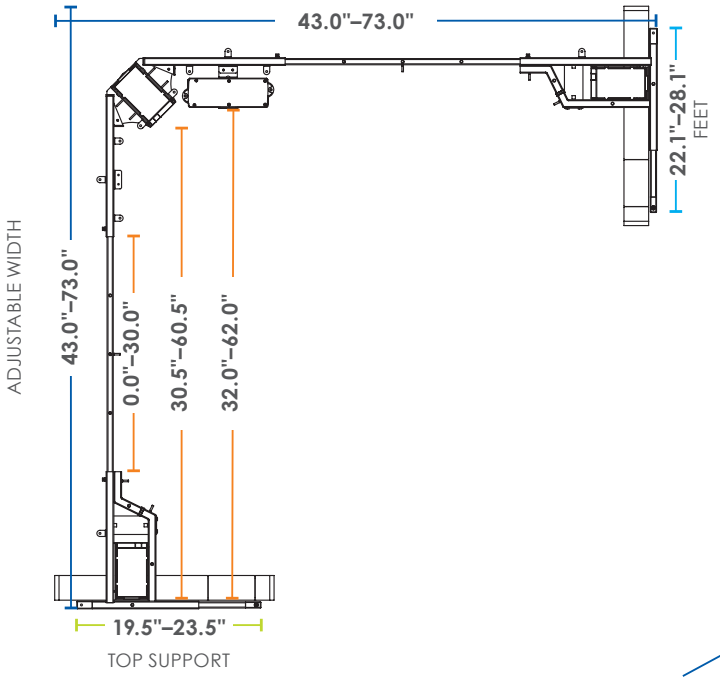


## ALL-FLEX™
120° CONFIGURATION

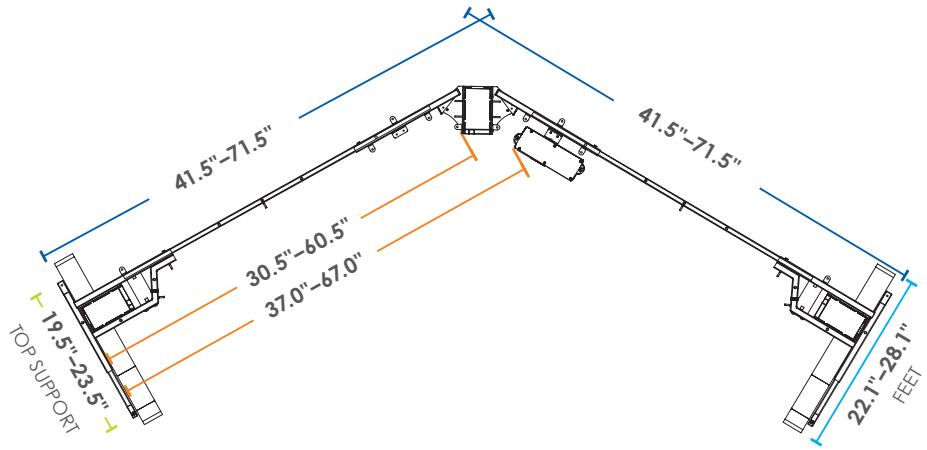


## ALL-FLEX™
SIDE

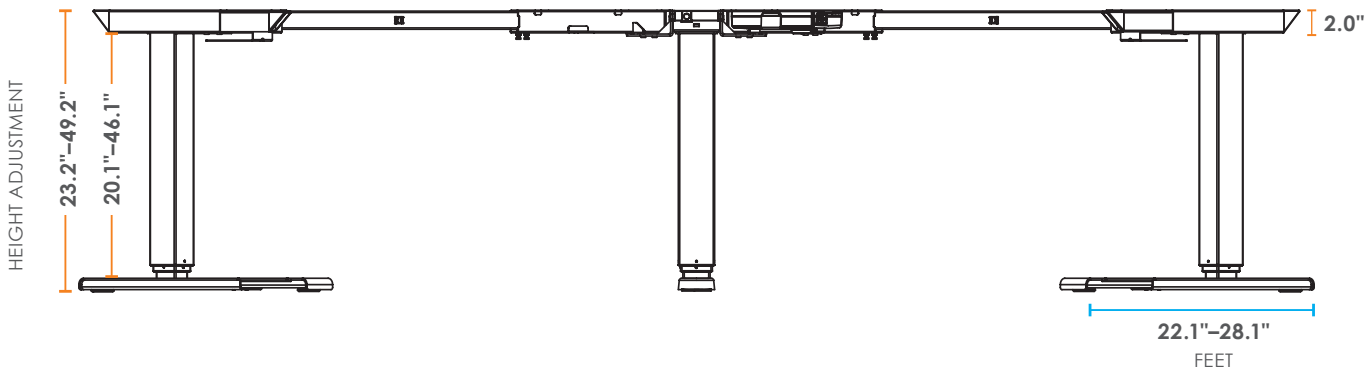


*new!* ALL-FLEX™ (3-LEG)

HEIGHT ADJUSTABLE TABLES